Surface Treatment Solutions

Product Selection Guide 2019

AIRBLAST

www.airblast.com

The Airblast Group
Since 1974 Airblast has been the world leader in providing blasting and painting solutions to the anticorrosion industries. With an unparalleled network of offices around the world Airblast works closely with our customers and distribution partners providing tried and tested equipment as well as developing customized solutions for specific applications.

The range of equipment sold by Airblast includes:
- Traditional blasting machines & accessories
- Shot blasting machines
- Blasting & painting rooms
- Blasting robots
- Metallization rooms
- Vacuum recovery systems
- Abrasive recycling systems
- Dust collectors
- Dehumidification equipment
- Inspection equipment

Airblast equipment is used in the following industries:
- Metal & steel construction
- Shipbuilding
- Petrochemical
- Oil and gas
- Wind energy
- Railway rolling stock
- Casting

Airblast-Abrasives B.V.
Airblast-Abrasives B.V. was founded in 2014 and produces Steel Shot and Steel Grit of the highest quality. Airblast-Abrasives also supplies a complete range of abrasives in every size and hardness. The Airblast-Abrasives team is available to assist customers in selecting the right abrasive mixture and to analyze the work process in order to maximize efficiency. All abrasives are subject to strict quality control to ensure delivery of the best available materials.

Airblast Group Commitments
Airblast is dedicated to maintain a profitable organization on a long term basis through ethically and morally sound business practices. By investing in the long term future of our organization, and those with whom we conduct business, Airblast believes that we can share sustained mutual success.

Our manufacturing facilities in Europe and the Far East produce fit for purpose quality products with region specific certification. All Airblast equipment is manufactured according to the highest relevant safety standards and passes our rigorous quality controls before dispatch.

Mindful of the environmental responsibilities faced by our generation Airblast is committed to a programme of research and development into technologies facilitating zero emission blasting and painting along with an education programme promoting planet friendly operations.

Airblast Corporate Video

Airblast-Abrasives Video

Table of Contents

Section 1	Blast Machines and Accessories	Page
	Blast machines	6
	Bulk blasting systems	19
	Blast guns - suction type	21
	Air receivers	22
	Remote control systems	23
	Clearline water filter / moisture separator	28
	Abrasive control valves	29
Section 2	**Nozzles, Holders, Hoses, Couplings &**	
	Blast nozzles	38
	Nozzle holders	57
	Couplings and clamps	58
	Hoses	62
Section 3	**Pipe Blasting & Coating**	
	Internal pipe blasters	70
	Internal pipe coaters	77
	Semi-automatic winch system	90
Section 4	**PPE - Personal Protection Equipment**	
	Abrasive blasting helmets	92
	Paintspray hoods	98
	Helmet air filters & cartridges	99
	Climate control tubes	102
	Gas detection monitor	104
	Lighting	106
	Blast & paint clothing	109
	Cool vest	110
Section 5	**Dust Free**	
	Aqua blasting	112
	Educt-O-Matic	115
	Mobile vacuum blast machines	118
	Blast cabinets	126
	Blast rooms	134
	UHP	136
Section 6	**Blastman Robotics**	
	B20CX	140
	B20S	142
	B20C-S	144
	B20ML (man-lift)	146
	B16CX	148
	B16S	150
	B16ML (man-lift)	152
	B12S	154
	B20LW	156
	MBU	158
	Transfer cars	160
Section 7	**Shot Blasting Machines**	
	RC-Line - Roller Conveyor	164
	SH-Line - Spinner Hanger	165
	TB-Line - Tumble Belt	166
	MR-Line - Multiple Rotating	167
	HP-Line - Hanger Pass-through	168
	PB-Line - Pipe Blasting	169
	TT-Line - Turning Table	170
	RS-Line - Round Spring	171
	TP-Line - Turning Plate	172
	MB-Line - Mesh Belt	173
Section 8	**Material Handling**	
	Vacuum recovery systems	176
	Abrasives recycling systems	181
	Can crushers	186
Section 9	**Air Treatment**	
	Venturi blowers	188
	Jet fans	189
	Aftercoolers	190
	Mobile dust collectors	191
	Dehumidifiers	192
Section 10	**Inspection**	
	Step 1 - Climatic conditions	198
	Step 2 - Surface cleanliness	204
	Step 3 - Profile	210
	Step 4 - Thickness	213
	Step 5 - Adhesion	219
	Step 6 - Inspection	222
Section 11	**Abrasives**	
	Metallic abrasives	226
	Non-metallic abrasives	235
Section 12	**Tips & Tricks**	
	Blasting	242
	Painting	247
	Inspection	249
	Abrasives	253
	Conversion factors	254

Notes

AIRBLAST

Section 1 - Blast Machines and Accessories

Product	Page
Blast machines (blue)	6
Blast machines (red)	13
Bulk blasting systems	19
ST1 Blast gun - suction type	20
ST2 Blast gun - suction type	21
Air receivers	22
RCV-125 Remote control system	23
RCV-50 Remote control system	25
ACV Airblast combo valve	26
Deadman Systems - Electric	27
Clearline water filter / moisture separator	28
AP-7 Abrasive control valve	29
FSV Flat sand valve	30
SGV Steel grit valve	31
GVA Abrasive membrane valve	32
AMV Micro valve	33
Thompson valve	34
Thompson valve II	35

Blast Machines (blue)

AIRBLAST

A range of high production single and double chamber blast machines, manufactured in Europe and TÜV approved to suit the requirements of the anticorrosion industries. All machines are designed to guarantee fast filling, unrestricted airflow and easy access for inspection and maintenance. High precision abrasive metering valves give accurate delivery of all types of blasting media.

Features:

- Concave head and conical bottom allows easy filling and smooth flow of all types of abrasive.
- Heavy duty pop-up valve to give quick response to pressurization.
- Lifting eyes for easy mobility.
- Mobility all machines mounted on large rugged wheels for easy manoeuvrability on site.
- Working pressure of 12 bar.
- A full range of abrasive metering valves are available.
- Standard fitted with:
- - RCV-125 pneumatic operated Remote Control System incl. DMH-125 Deadman Handle and 20 meter twin-line control hose c/w couplings.
  - Clearline Moisture Separator to prevent the entry of moisture and oil from the compressor into the blast pot.
- All machines are CE marked and TÜV approved.

SPECIFICATIONS

Model	Dimensions (diameter x height in mm)	Capacity (ltr.)	Weight (kgs.)
ABSC-1028	258 x 736	18	24
ABSC-1440	358 x 1135	60	61
ABSC-1648	486 x 1170	100	90
ABSC-2048	486 x 1392	140	105
ABSC-2452	608 x 1370	200	135
ABSC-2460	608 x 1620	280	151

ORDERING INFORMATION

Standard package including:Blast Machine with AP-7/Micro Valve, RCV-125 Remote Control System incl. Silencer, DMH-125 Deadman Handle and Remote Control Hose, Clearline Moisture Separator, Screen, Cover, Blast Hose Nozzle Holder and Coupling, Tungsten Carbide lined Blast Nozzle, HAF Helmet Air Filter, Helmet Air Hose, Blast Helmet with Spare Lenses, Leather/Cotton Overall and a pair of Leather Blasting Gloves.

Part no.	Description	Part no.	Description
1001910	System-3	1008917	System-6
1004917	System-4	1010068	System-7
1006917	System-5	1012068	System-8

1144300	Twin line Control Hose, 5 mtr., coupled
1144400	Twin line Control Hose, 20 mtr., coupled
1144500	Twin line Control Hose, 40 mtr., coupled
1171000	ARC-H Pneumatic Deadman Handle - small type
1203000	DMH-125 Pneumatic Deadman Handle

Blast Machine (blue) - Features

Concave head and conical bottom allows easy filling and easy flow of all types of abrasives

Heavy duty pop-up valve to give quick response to pressurization

Optional available with **Screen and Cover**

Lifting Eyes for easy mobility

Heavy Duty constructed **Pressure Vessel** tested up to **13 bar**

Inspection door quick release for **Easy Inspection** and servicing

Breathing **Helmet Air Filter** Replacement cartridge

Blast Nozzles:
- Tungsten Carbide
- Boron Carbide
- Silicon Carbide
- Silicon Nitride

High Quality Abrasive **Blasting Hose**

Piping on all machines are 1 1/4" with **long life rubber parts** fitted where necessary

RCV-125 air operated **Remote Control System** incl. DMH-125 Deadman Handle and 20 meter twin-line control hose c/w couplings (also available in electric execution)

Highly efficient Clearline Moisture Separator to prevent the entry of moisture and oil from the compressor into the blast pot

Mobility all machines mounted on large rugged wheels for **Easy Manoeuvrability** on site

Blast Helmets:
- Extreme
- Astro
- NOVA 2000
- NOVA 1
- NOVA 3

Overall & Gloves

Abrasive Metering Valves:
- Micro valve (standard)
- FSV Flat sand valve
- SGV Steel grit valve
- GVA Steel grit valve
- Thompson valve
- Thompson valve II

All machines are CE approved and supplied with **full international test certification**

Blast Machine (blue) Configurator - 18/60 liters

Part no.	Capacity		Metering Valves						Operation			Other Options		
	18 liter	60 liter	AP-7 Abrasive Control Valve ½"	GVA-12 Abrasive Metering Valve	FSV Flat Sand Valve 1¼"	GVA-32 Abrasive Metering Valve	SGV Steel Grit Valve	Micro Valve	Manual Operation	RCV-50 Remote Control System	RCV-125 Remote Control System	Clearline Moisure Separator ½"	Clearline Moisure Separator 1½"	Safety Valve Assembly
1001010	•		•						•					
1001020	•		•						•			•		
1001030	•		•							•				
1001040	•		•							•		•		
1001060	•		•							•				•
1001310	•			•					•					
1001330	•			•						•				
1003010		•			•				•					
1003020		•			•								•	
1003030		•			•						•			
1003040		•			•						•		•	
1003050		•			•						•			•
1003060		•			•						•		•	•
1003310		•				•			•					
1003330		•				•					•			
1004010		•					•		•					
1004020		•					•		•				•	
1004030		•					•				•			
1004040		•					•				•		•	
1004050		•					•				•			•
1004060		•					•				•		•	•
1004911		•						•	•					
1004912		•						•	•				•	
1004913		•						•			•			
1004914		•						•			•		•	
1004915		•						•			•			•
1004916		•						•			•		•	•

Other configurations are available upon request.

Blast Machine (blue) Configurator - 100/140 liters

Part no.	Capacity		Metering Valves				Operation		Other options	
	100 liter	140 liter	FSV Flat Sand Valve	GVA-32 Abrasive Metering Valve	SGV Steel Grit Valve	Micro Valve	Manual Operation	RCV-125 Remote Control System	Clearline Moisure Separator	Safety Valve Assembly
1005010	•		•				•			
1005020	•		•				•		•	
1005030	•		•					•		
1005040	•		•					•	•	
1005050	•		•					•		•
1005060	•		•					•	•	•
1005310	•			•			•			
1005330	•			•				•		
1006010	•				•		•			
1006020	•				•				•	
1006030	•				•			•		
1006040	•				•			•	•	
1006050	•				•			•	•	
1006060	•				•			•	•	•
1006911	•					•	•			
1006912	•					•	•		•	
1006913	•					•		•		
1006914	•					•		•	•	
1006915	•					•		•		•
1006916	•					•		•	•	•
1007010		•	•				•			
1007020		•	•				•		•	
1007030		•	•					•		
1007040		•	•					•	•	
1007050		•	•					•		•
1007060		•	•					•	•	•
1007310		•		•			•			
1007330		•		•				•		
1008010		•			•		•			
1008020		•			•		•		•	
1008030		•			•			•		
1008040		•			•			•	•	
1008050		•			•			•		•
1008060		•			•			•	•	•
1008911		•				•	•			
1008912		•				•	•		•	
1008913		•				•		•		
1008914		•				•		•	•	
1008915		•				•		•		•
1008916		•				•		•	•	•

Other configurations are available upon request.

Blast Machine (blue) Configurator - 200/280 liters

AIRBLAST

Part no.	Capacity		Metering Valves				Operation		Other options	
	200 liter	280 liter	FSV Flat Sand Valve	GVA-32 Abrasive Metering Valve	SGV Steel Grit Valve	Micro Valve	Manual Operation	RCV-125 Remote Control System	Clearline Moisure Separator	Safety Valve Assembly
1009010	•		•				•			
1009020	•		•				•		•	
1009030	•		•					•		
1009040	•		•					•	•	
1009050	•		•					•		•
1009060	•		•					•	•	•
1009310	•			•			•			
1009330	•			•				•		
1009340	•			•				•	•	
1010010	•				•		•			
1010020	•				•		•		•	
1010030	•				•			•		
1010040	•				•			•	•	
1010050	•				•			•		•
1010060	•				•			•	•	•
1010062	•					•	•			
1010063	•					•	•		•	
1010064	•					•		•		
1010065	•					•		•	•	
1010066	•					•		•		•
1010067	•					•		•	•	•
1011010		•	•				•			
1011020		•	•				•		•	
1011030		•	•					•		
1011040		•	•					•	•	
1011050		•	•					•		•
1011060		•	•					•	•	•
1011310		•		•			•			
1011330		•		•				•		
1011340		•		•				•	•	
1012010		•			•		•			
1012020		•			•			•		•
1012030		•			•			•		
1012040		•			•			•	•	
1012050		•			•			•		•
1012060		•			•			•	•	•
1012062		•				•	•			
1012063		•				•			•	
1012064		•				•		•		
1012065		•				•		•	•	
1012066		•				•		•		•
1012067		•				•		•	•	•

Other configurations are available upon request.

Blast Machine (blue) 18 ltr. - Drawing & Part List

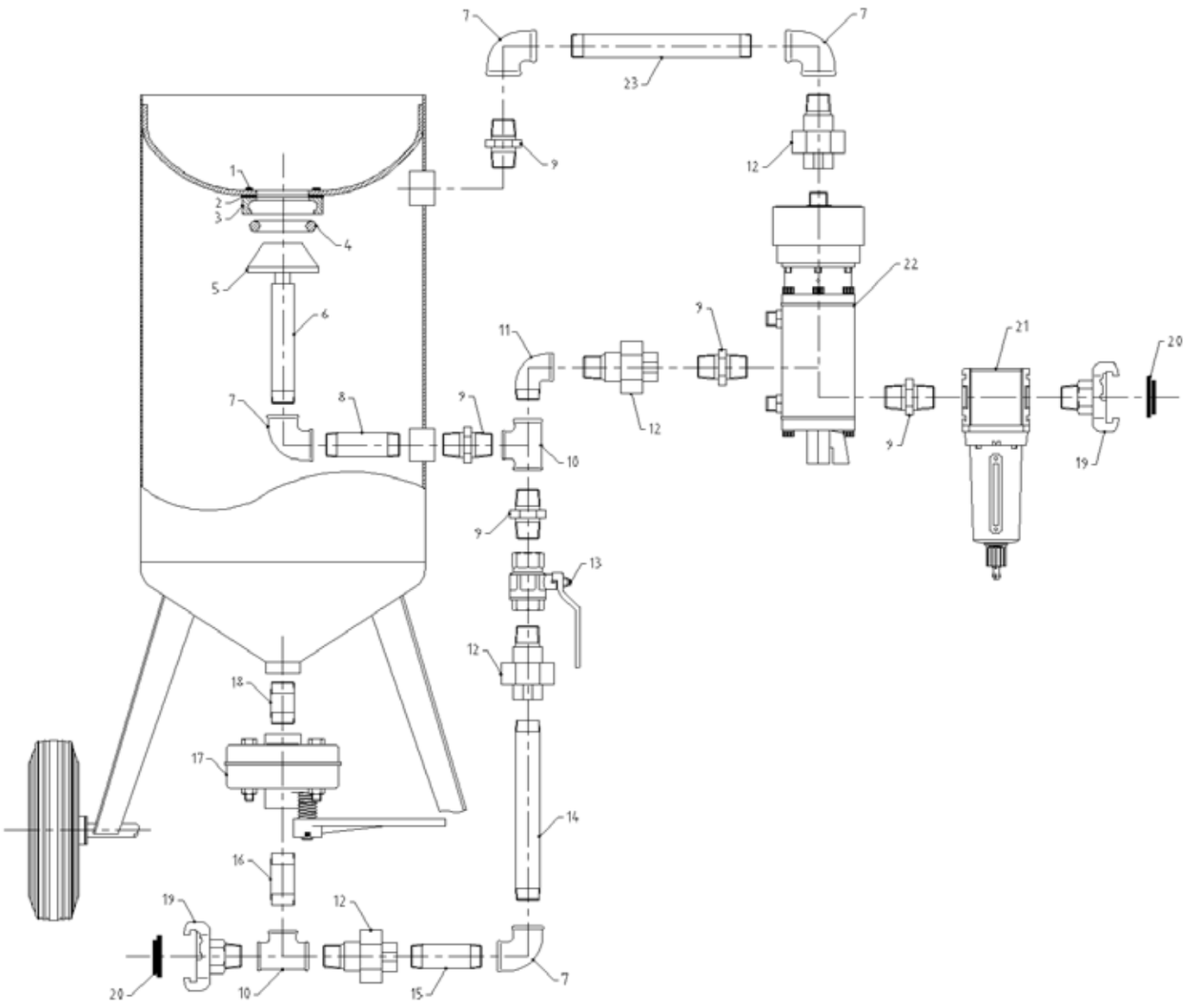

Blast Machine (blue) 18 ltr. - Parts					
Item	**Part no.**	**Description**	**Item**	**Part no.**	**Description**
1	1072000	Pop-up valve seat retainer bolt	14	1089000	Pipe 150mm, ½", MM
2	1095000	Gasket for pop-up valve seat retainer	15	1087000	Pipe 80mm, ½", MM
3	1074000	Pop-up valve seat retainer	16	1081000	Pipe 50mm, ½", MM
4	1073000	AP-5 Pop-up O-ring	17	6026000	AP-7 Abrasive control valve, ½", FF
5	1075000	AP-2 Pop-up valve with shaft	18	2225300	Pipe 30 mm, ½", MM
6	1077000	Inner pipe, ½", M	19	2170200	KAG-12 Quick coupling, ½", M
7	2197300	Elbow no. 90, ½", FF	20	2164000	CQG-0 Rubber coupling gasket
8	1079000	Inner pipe, ½", MM	21	4056001	Clearline, ½", FF
9	2225300	Hex nipple, ½", MM	22	1122000	RCV-50 incl. Silencer
10	2211300	T-piece, ½", FFF	23	1079000	Pipe 100 mm, ½", MM
11	2199300	Elbow, ½", MF		1070000	Cover for ABSC-1028 (not shown)
12	2249300	Union, ½", MF		1071000	Screen for ABSC-1028 (not shown)
13	1090000	AP-1 Air valve, ½", FF			

Blast Machine (blue) 200 ltr. - Drawing & Part List

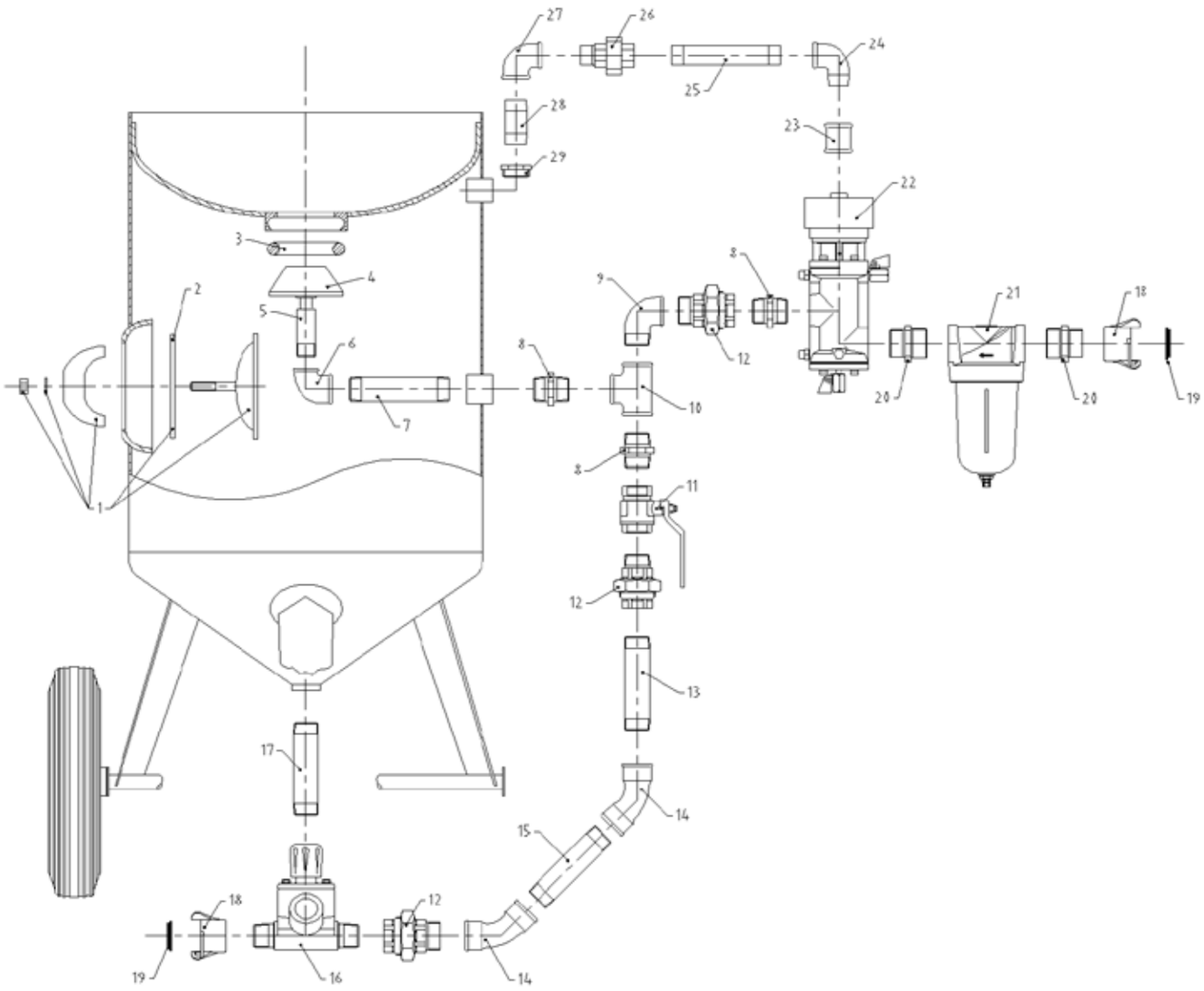

Blast Machine (blue) 200 ltr. - Parts					
Item	**Part no.**	**Description**	**Item**	**Part no.**	**Description**
1	1048000	Inspection door assy	17	1046000	Pipe nipple 100mm rubber lined, 1¼", MM
2	1047000	Inspection door gasket	18	2163000	CFT Coupling, 1¼", F
3	1192000	Pop-up O-ring	19	2165000	Rubber coupling gasket
4	1188000	Pop-up valve with shaft, flat	20	2275800	Reduction nipple, 1½"- 1¼", MM
5	1050000	Pipe x 170mm, 1", M	21	4057000	Clearline, 1½"
6	2259600	Elbow, 1¼" - 1", FF	22	1202000	RCV-125/B remote control
7	1027000	Inner pipe x 275mm, 1¼", MM	23	2291100	Socket ¾", FF
8	2225600	Hex nipple, 1¼", MM	24	2291000	Elbow, ¾", MF
9	2191600	Elbow, 1¼", MF	25	2290900	Pipe nipple 100mm, ¾", MM
10	2211600	T-Piece, 1¼", FFF	26	2290800	Union, ¾", MF
11	1193000	Air valve, 1¼", FF	27	2290700	Elbow, ¾", FF
12	2249600	Union, 1¼", MF	28	2290601	Pipe nipple 50mm, ¾", MM
13	1037001	Pipe nipple 235mm, 1¼", MM	29	2290500	Reduction ring, ¾" - 1", MF
14	2193600	Elbow, 1¼", FF		1055000	Screen for ABSC-2452 (not shown)
15	1034000	Pipe nipple 160mm, 1¼", MM		1059000	Cover for ABSC-2452 (not shown)
16	6080000	Micro Valve, 1¼"			

Airblast Blast Machines (red)

A range of high production single chamber blast machines, manufactured to suit the requirements of the anticorrosion industries. All machines are designed to guarantee fast filling, unrestricted airflow and easy access for inspection and maintenance. High precision abrasive metering valves give accurate delivery of all types of blasting media.

Features:

- Working pressure of 12 bar.
- Concave head and conical bottom allows easy filling and easy flow of all types of abrasives.
- Heavy duty pop-up valve to give quick response to pressurization.
- Lifting eyes for easy mobility.
- Special Designed Hose Connection for easy maintenance.
- Mobility all machines mounted on large rugged wheels for easy manoeuvrability on site.
- A full rrd fitted with:
  - RCV-125 pneumatic operated Remote Control System incl. DMH-125 Deadman Handle and 20 meter twin-line control hose c/w couplings.
  - Highly efficient Clearline Moisture Separator to prevent the entry of moisture and oil from the compressor into the blast pot.
- All machines are CE approved and supplied with full international test certification.

SPECIFICATIONS

Model	Dimensions (diameter x height in mm)	Capacity (ltr.)	Weight (kgs.)
ABSC-18	258 x 781	18	40
ABSC-50	630 x 1150	50	77
ABSC-100	800 x 1150	100	105
ABSC-200	850 x 1450	200	161

ORDERING INFORMATION

Standard Package including: Blast Machine with AP-7/Microvalve, RCV-125 Remote Control System incl. Silencer, DMH-125 Deadman Handle and Remote Control Hose, Clearline Moisture Separator, Screen, Cover, Blast Hose Nozzle Holder and Coupling, Tungsten Carbide lined Blast Nozzle, HAF Helmet Air Filter, Helmet Air Hose, Blast Helmet with Spare Lenses, Leather/Cotton Overall and a pair of Leather Blasting Gloves.

Part no.	Description
1019108	ABSC-18 System-3
1019214	ABSC-50 System-4
1019314	ABSC-100 System-5
1019414	ABSC-200 System-7

1144300	Twin line Control Hose, 5 mtr., coupled
1144400	Twin line Control Hose, 20 mtr., coupled
1144500	Twin line Control Hose, 40 mtr., coupled
1171000	ARC-H Pneumatic Deadman Handle - small type
1203000	DMH-125 Pneumatic Deadman Handle

Blast Machines (red) - Features

AIRBLAST

Optional available with **screen and cover**

Concave head and conical bottom allows easy filling and easy flow of all types of abrasives

Heavy duty pop-up valve to give quick response to pressurization

Lifting eyes for easy mobility

Safety Valve Assembly for monitoring of pressure

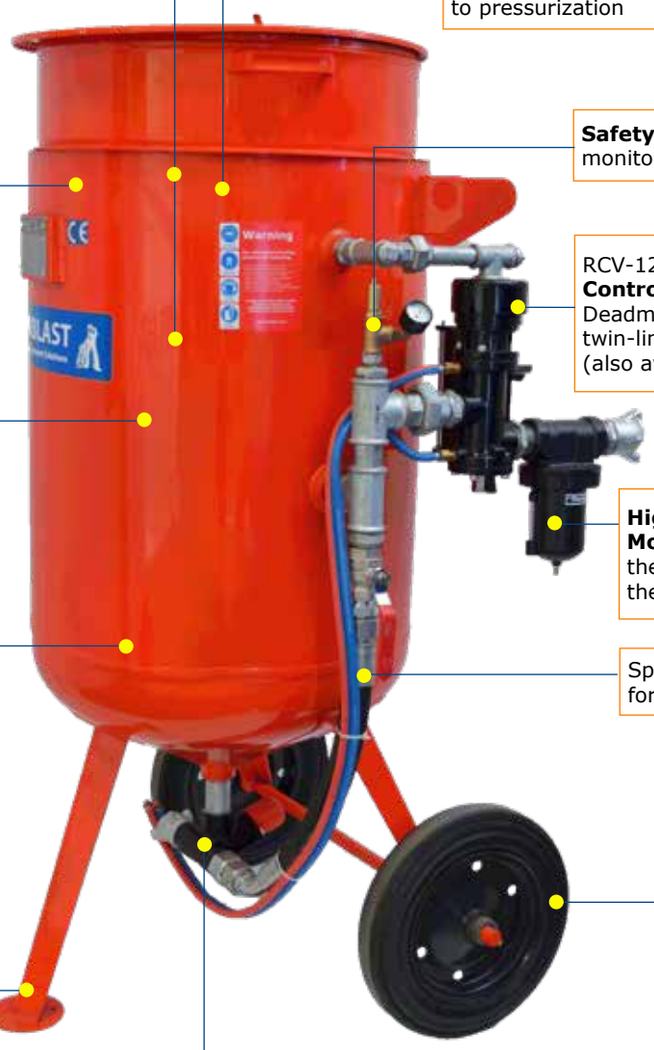

RCV-125 pneumatic operated **Remote Control System** incl. DMH-125 Deadman Handle and 20 meter twin-line control hose c/w couplings (also available in electric execution)

Inspection door quick release for **easy inspection** and servicing

Highly efficient Clearline Moisture Separator to prevent the entry of moisture and oil from the compressor into the blast pot

Working pressure of 12 bar

Special Designed Hose Connection for **easy maintenance**

All machines mounted on large rugged wheels for **easy manoeuvrability** on site

Optional: **Earthing Cable**

Abrasive Metering Valves:
- Micro valve (standard)
- FSV Flat sand valve
- SGV Steel grit valve
- GVA Steel grit valve
- Thompson valve
- Thompson valve II

All machines are CE approved and supplied with **test certification**

Blast Machine (red) Configurator - 18/50 liters

Part no.	Capacity		Metering Valves						Operation			Other Options		
	18 liter	50 liter	AP-7 Abrasive Control Valve ½"	GVA-12 Abrasive Metering Valve	FSV Flat Sand Valve 1¼"	GVA-32 Abrasive Metering Valve	SGV Steel Grit Valve	Micro Valve	Manual Operation	RCV-50 Remote Control System	RCV-125 Remote Control System	Clearline Moisure Separator ½"	Clearline Moisure Separator 1½"	Safety Valve Assembly
1019101	•		•						•					
1019102	•		•						•			•		
1019103	•		•							•				
1019104	•		•							•		•		
1019105	•		•							•		•		•
1019106	•			•					•					
1019107	•			•						•				
1019201		•			•				•					
1019202		•			•								•	
1019203		•			•						•			
1019204		•			•						•		•	
1019205		•			•						•			•
1019206		•			•						•		•	•
1019208		•						•	•					
1019209		•						•					•	
1019210		•						•			•			
1019211		•						•			•		•	
1019212		•						•			•			•
1019213		•						•			•		•	•
1019215		•				•			•					
1019216		•				•					•			
1019217		•					•		•					
1019218		•					•						•	
1019219		•					•				•			
1019220		•					•				•		•	
1019221		•					•				•			•
1019222		•					•				•		•	•

Other configurations are available upon request.

Blast Machines (red) Configurator - 100/200 liters

AIRBLAST

Part no.	Capacity		Metering Valves				Operation		Other options	
	100 liter	200 liter	FSV Flat Sand Valve	GVA-32 Abrasive Metering Valve	SGV Steel Grit Valve	Micro Valve	Manual Operation	RCV-125 Remote Control System	Clearline Moisure Separator	Safety Valve Assembly
1019301	•		•				•			
1019302	•		•				•		•	
1019303	•		•					•		
1019304	•		•					•	•	
1019305	•		•					•		•
1019306	•		•					•	•	•
1019308	•					•	•			
1019309	•					•			•	
1019310	•					•		•		
1019311	•					•		•	•	
1019312	•					•		•		•
1019313	•					•		•	•	•
1019315	•			•			•			
1019316	•			•				•		
1019317	•				•		•			
1019318	•				•		•		•	
1019319	•				•			•		
1019320	•				•			•	•	
1019321	•				•			•		•
1019322	•				•			•	•	•
1019401		•	•				•			
1019402		•	•				•		•	
1019403		•	•					•		
1019404		•	•					•	•	
1019405		•	•					•		•
1019406		•	•					•	•	•
1019408		•				•	•			
1019409		•				•	•		•	
1019410		•				•		•		
1019411		•				•		•	•	
1019412		•				•		•		•
1019413		•				•		•	•	•
1019415		•		•			•			
1019416		•		•				•		
1019417		•		•				•	•	
1019418		•			•		•			
1019419		•			•				•	
1019420		•			•			•		
1019421		•			•			•	•	
1019422		•			•			•		•
1019423		•			•			•	•	•

Other configurations are available upon request.

Blast Machine (red) 18 ltr. - Drawing & Part List

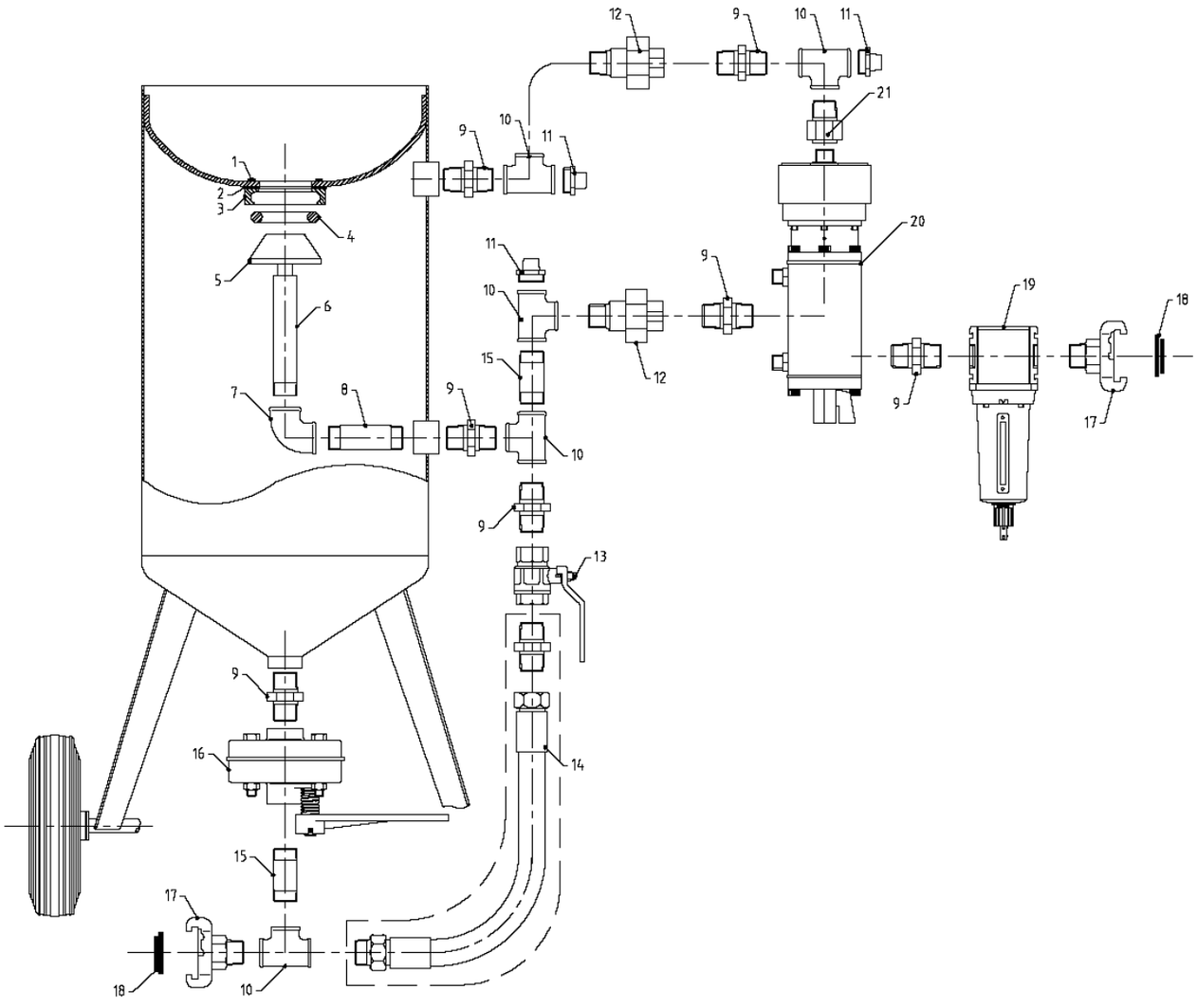

Blast Machine (red) 18 ltr. - Parts					
Item	**Part no.**	**Description**	**Item**	**Part no.**	**Description**
1	1072002	Pop-up valve seat retainer bolt c/w ring	12	2293023	Union ½", MF, galvanized
2	1095002	Gasket for pop-up valve seat retainer	13	1090000	AP-1½" Air valve, FF
3	1074002	Pop-up valve seat retainer	14	1089603	Coupling set air hose 18ltr AP-7
4	1073002	AP-5 Pop-up O-ring	15	2293026	Pipe ½" x 50mm, MM, galvanized
5	1075002	AP-2 Pop-up valve with shaft, flat	16	6026000	AP-7 Abrasive control valve, ½"
6	2077002	Inner pipe x 200mm, ½", MM	17	2170200	KAG-12 Quick coupling ½", galvanized
7	2197300	Elbow ½", FF	18	2164000	CQG-0 Rubber coupling gasket
8	1079000	Inner pipe ½" x 100mm, MM	19	4056001	Clearline ½", FF
9	2293014	Hex nipple ½", MM, galvanized	20	1122000	RCV 50 incl. silencer
10	2293001	T-piece ½", FFF, galvanized	21	2293029	Socket ½", MF
11	2293002	Plug ½", galvanized			

Blast Machine (red) 200 ltr. - Drawing & Part List

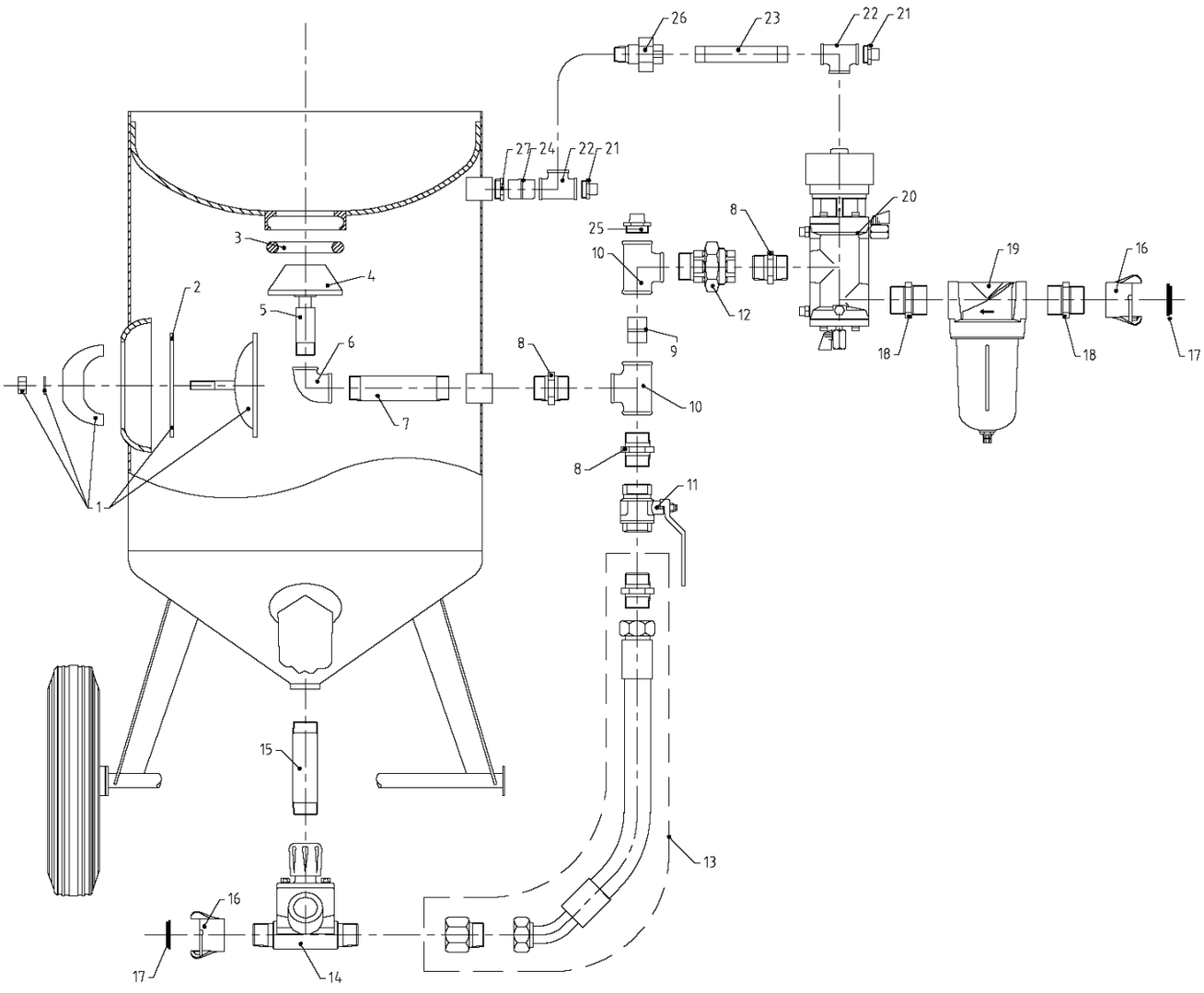

Blast Machine (red) 200 ltr. - Parts					
Item	**Part no.**	**Description**	**Item**	**Part no.**	**Description**
1	1048002	Inspection door assy	15	1034000	Pipe rubber lined 1¼” x 100mm, MM, galvanized
2	1047002	Inspection door gasket	16	2163000	CFT coupling, 1¼”, galvanized
3	1192000	Pop up O-ring	17	2165000	Rubber gasket
4	1188000	Pop up valve with shaft, flat	18	2293008	Reduction nipple, 1½" - 1¼", MM, galvanized
5	1050000	Pipe x 170mm 1", MM	19	4057000	Clearline 1½"
6	2259600	Elbow 1¼" - 1", FF	20	1202000	RCV-125/B remote control
7	1027000	Inner pipe 1¼” x 275mm, MM	21	2293010	Plug ¾", galvanized
8	2293004	Hex nipple 1¼", MM, galvanized	22	2293009	T piece ¾", FFF, galvanized
9	2293019	Pipe 1¼” x 80mm, MM, galvanized	23	2293007	Pipe x 100mm, ¾", MM, galvanized
10	2293012	T piece 1¼", FFF, galvanized	24	2290601	Pipe ¾” x 50mm, MM, galvanized
11	1193000	Air valve 1¼", FF	25	2293011	Plug 1¼", galvanized
12	2293003	Union 1¼", MF, galvanized	26	2293006	Union ¾", MF, galvanized
13	1089600	Coupling set air hose 200ltr	27	2293005	Reduction ring ¾" - 1", MF, galvanized
14	6080000	MicroValve 1¼”			

Bulk Blasters - Model 120 & 160

Airblast Bulk Blasting Systems are designed for large scale blasting jobs and can be used with a wide range of accessories including a wide choice of nozzles.

Vessels are built to fit various mountings and trailers (see schedule).

Features:

- 8,6 bar (125 psi) rated vessel with four outlet capability
- Full load lifting eyes
- 4" Bottom drain and inlet manifold
- Two complete 1½" Thompson Valve outlets with urethane sleeve (optional tungsten carbide sleeve)
- Pneumatic or electric remote controls
- 30 mtr. twin line control hose or electrical control cord
- 7.5 mtr. power cord
- Deadman control and manual blowdown
- 1½" Internal piping for pressure and vent

All other sizes, configurations and types of tanks available on request.

ORDERING INFORMATION

Part no.	Decription
	MODELS
1580000	Model 120 - 120 cu.ft. Bulk Blaster 3400 litre capacity (Shipping weight 2,350 lbs. / 1,070 kg.)
1580100	Model 160 - 160 cu.ft. Bulk Blaster 4500 litre capacity (Shipping weight 2,950 lbs. / 1,340 kg.)
	OPTIONS
1580200	Moisture Separator
1580300	Additional outlet, pneumatic or electric, complete
1580400	Tungsten Carbide sleeve (per outlet)
1526300	Union End Ball Valve (per outlet)
1580500	Remote Abrasive Cutoff, pneumatic (per outlet)
1580600	Remote Abrasive Cutoff, electric (per outlet)
1580700	10.3 bar (150 psi) Rated vessel
	MOUNTINGS
1580800	610 mm (24") Leg extensions
1580900	Skid mount
	TRAILERS - Model 120 only (Load limit: 5450 kgs.)
1581000	Rigid Axle Yard Trailer, (weight: 485 kgs.)
1581100	Torsion Suspension Yard Trailer, (weight: 705 kgs.)
1581200	Highway Trailer with lights, heavy duty fenders, hydraulic brakes, torsion suspension (weight: 655 kgs.)
	TRAILERS - Model 120 and 160 (Load limit: 7275 kgs.)
1581300	Rigid Axle Yard Trailer, (weight: 750 kgs.)
1581400	Torsion Suspension Yard Trailer, (weight: 775 kgs.)
1581500	Highway Trailer with lights, heavy duty fenders, hydraulic brakes, torsion suspension (weight: 800 kgs.)
	DUAL_TANDEM HIGHWAY TRAILERS - Model 120 and 160 (Load limit: 9100 kgs.)
1581600	Dual-Tandem Highway Trailer with lights, heavy duty fenders, hydraulic brakes and load leveller leaf spring suspension (weight 1075 kgs.)

ST1 Blast Gun - suction type

Suction type blast gun with cup suitable for small blasting jobs.

- Hardened nozzle
- Chromed gun housing
- Nozzle orifice : 3 mm
- Cup capacity : 1 liter
- Air hose connection : G1/4” inner thread
- Air consumption at 6 bar : 318 liter/min
- Weight : 0,850 kg

ST1 BLAST GUN WITH 1 LTR CUP		
	Part no.	**Description**
	1096000	ST1 Blast gun with 1 ltr cup

Parts List

Item	Part no.	Description
1	1096010	Outer nozzle ST1
2	1096011	Adjusting ring ST1
3	1096012	Inner nozzle ST1
6	1096013	Air valve complete
6-1	1096014	Air valve spring
6-2	1096015	Air valve
6-3	1096016	Air valve pin
7	1096017	Trigger pin
8	1096018	Trigger
C	1096019	Packing kit ST1
9	1096020	Cup complete 1 ltr
10	1096021	Cover complete
10-1	1096022	Suction pipe
11	1096023	Cup 1 ltr
	1096024	Cup ring gasket leather (set of 10)
17	1096025	Nipple G 1/4 M x G 1/4 M

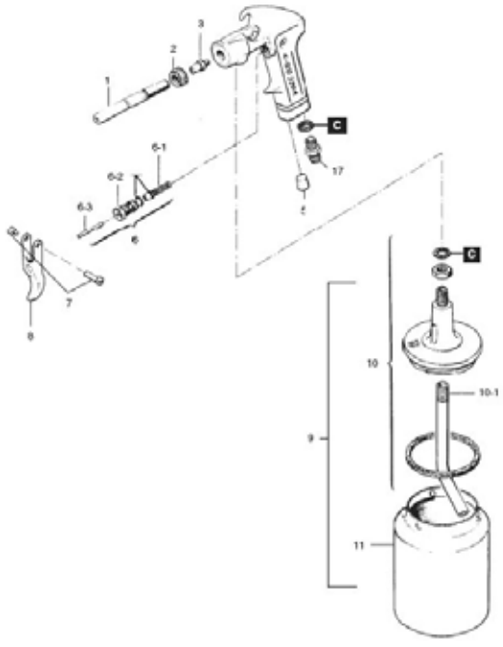

ST2 Blast Gun - suction type

Suction type blast guns with hose are suitable for small blasting jobs.

- Hardened nozzle
- Nozzle orifice : 5 mm
- Air hose connection : G1/4” inner thread
- Air consumption at 6 bar : 318 liter/min
- Weight : 0,780 kg

ST2 BLAST GUN WITH SUCTION HOSE		
	Part no.	**Description**
	1097000	ST2 Blast gun, 5 mm with suction hose
	1097100	ST2 Blast gun, 6 mm with suction hose

Parts List

Item	Part no.	Description
1	1097010	Inner and outer nozzle kit 5 mm ST2
1	1097011	Inner and outer nozzle kit 6 mm ST2
1-1	1097012	Nozzle holder ST2
1-2	1097013	Outer nozzle 5 mm ST2
1-2	1097014	Outer nozzle 6 mm ST2
1-3	1097015	Inner nozzle ST2
4	1096013	Air valve complete
4-1	1096014	Air valve spring
4-2	1096015	Air valve
4-3	1096016	Air valve pin
5	1096017	Trigger pin
6	1096018	Trigger pin
7	1097016	Suction hose complete
17	1096025	Nipple G 1/4 M x G 1/4 M
C	1097017	Packing kit ST2

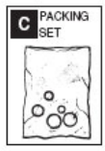

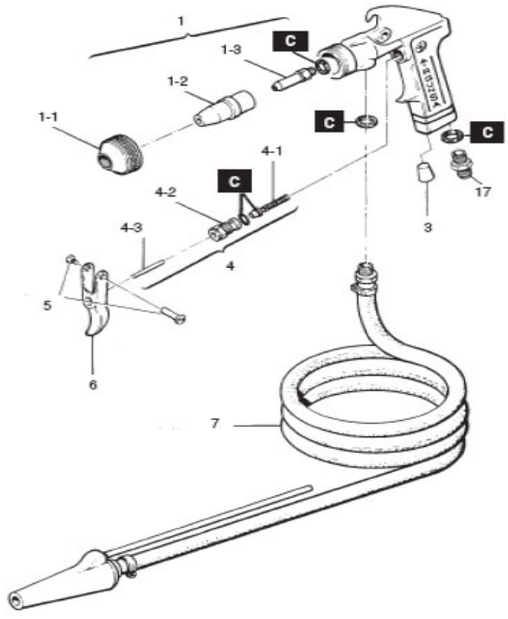

Air Receivers

Airblast supplies Air Receivers suitable for various applications in various designs, including high performance of up to 30 bar with different quality certificates such as Lloyds, register of Shipping, Buro Veritas, German Lloyds etc.

The Air Receivers are CE marked and supplied with pressure gauge, safety valve with certificate, moisture drain and ball valve, in PU paint, RAL color or galvanized.

ORDERING INFORMATION

Part no.	Type	Capacity	Max. pressure
1590800	Vertical	500	11
1590810	Horizontal	500	11
1590820	Vertical	500	16
1590901	Horizontal	500	16
1590910	Vertical	750	11
1590920	Horizontal	750	11
1590930	Vertical	750	16
1590940	Horizontal	750	16
1590000	Horizontal	1000	11
1590100	Vertical	1000	11
1590200	Horizontal	1000	16
1590300	Vertical	1000	16
1590400	Horizontal	1500	11
1590500	Vertical	1500	11
1590600	Horizontal	1500	16
1590700	Vertical	1500	16
1591000	Horizontal	2000	11
1591100	Vertical	2000	11
1591200	Horizontal	2000	16
1591300	Vertical	2000	16
1592000	Horizontal	3000	11
1592100	Vertical	3000	11
1592200	Horizontal	3000	16
1592300	Vertical	3000	16

Other executions are available upon request.

RCV-125 Remote Control System

The RCV-125 pressure-release pneumatic systems operate on the return-air principle. A handle installed at the nozzle connects pneumatically to inlet and outlet valves on the blast machine. With the safety petcock on the inlet valve closed, the operator depresses the handle which opens the inlet valve and closes the outlet to start blasting; releasing the handle reverses the process and blasting stops. This safety system stops blasting should the operator lose control of the nozzle. And when the blast session is over, the safety petcock is opened to prevent activation, even when the handle is depressed.

For applications that require frequent starts and stops, machines should be equipped with pressure-hold pneumatic remote controls, which keep the blast machine under pressure but allow the operator to start and stop blasting as frequently as needed. The machine is pressurized and depressurized manually, and the remote control handle controls the on/off of the abrasive and air independently. These systems are available in pneumatic and electric models.

ORDERING INFORMATION	
Part no.	**Decription**
1200000	RCV-125/20 1¼" REMOTE CONTROL VALVE COMPLETE INCLUDING: Silencer/Muffler, 20 meters twin hose coupled, DMH-125 Deadman Handle
1201000	RCV-125/40 1¼" REMOTE CONTROL VALVE COMPLETE INCLUDING: Silencer/Muffler, 40 meters twin hose coupled, DMH-125 Deadman Handle
1202000	RCV-125/B REMOTE CONTROL VALVE ONLY (SILENCER INCLUDED)
1203000	DMH-125 Deadman Handle for twin line remote control operation

TWIN LINE HOSE ASSEMBLIES	
1144300	Twin hose coupled, lenght of 5 mtrs.
1144400	Twin hose coupled, lenght of 20 mtrs.
1144500	Twin hose coupled, lenght of 40 mtrs.

RCV-125 REMOTE CONTROL VALVE - Parts				
Item	**Part no.**	**Description**		**Qty**
01	1206000	Valve housing		1
02	1206100	Bleed-off cylinder housing		1
03	1206200	Bleed-off manifold		1
04	1206300	Top cover		1
05	1206400	Inlet valve		1
06	1206500	Bleed-off cylinder		1
07	1206600	Piston		2
08	1206700	Bottom plate		1
09	1206800	Diaphragm	*	1
10	1206900	Piston seal	*	2
11	1207000	O-ring	*	3
12	1207100	Packing	*	2
13	1178000	Brass hex nipple ¼”		1
14	1178000	Brass hex nipple ¼”		1
15	1152000	Ball valve ¼”		2
16	1207200	Piston screw 8x15		2
17	2225400	Hex nipple ¾”		1
18	1207400	Screw 8x25		12
19	1207600	Silencer housing		1
20	1207700	Silencer top cover		1
21	1207800	Silencer bottom plate		1
22	1207900	Silencer housing pin 5x215		3
23	1208000	Silencer cartridge		1
24	1208100	Silencer cartridge support		1
25	1208600	Nut		6
26	1208400	Union elbow		1
27	2225400	Hex nipple ¾”		1
28	1208700	Check valve (not shown)		1
29	1207500	Plug ¼” (not shown)		1
30	1209600	O-ring	*	
All *-marked items are included in RCV-125 Repair kit (art.nr. 12050) in quantities shown.				

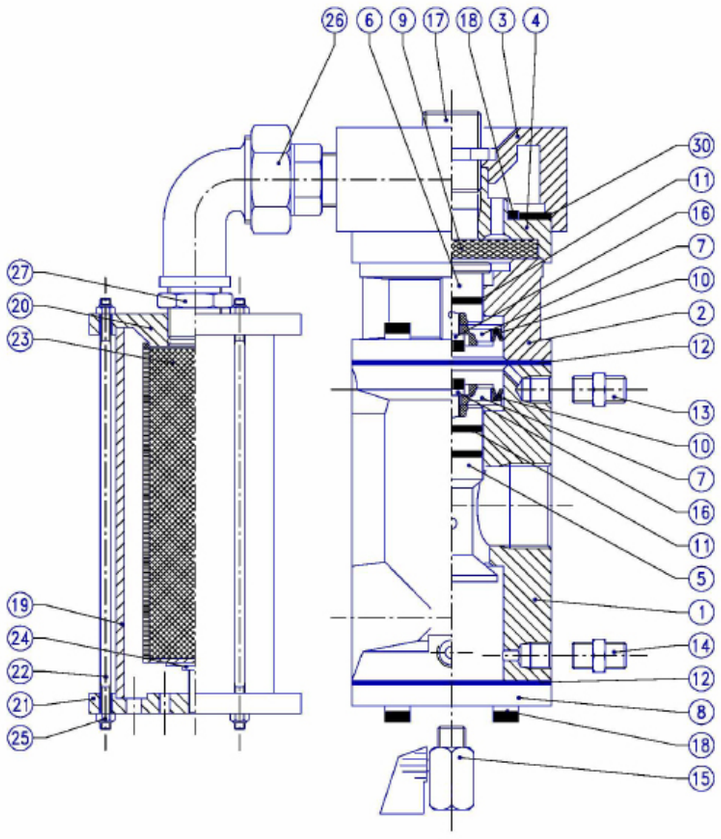

DMH-125 DEADMAN HANDLE - Parts			
Item	**Part no.**	**Description**	**Qty**
01	1203100	Handle body	1
02	1203200	Lever	1
03	1203300	Pneumatic manifold	1
04	1203400	Lever safety lock	1
05	1203500	Gasket	1
06	1203600	Rubber insert	1
07	1203700	Reduction nipple ¼” x ⅛” (restricted)	1
08	1203800	Reduction nipple ¼” x ⅛”	1
09	1203900	Spring	2
10	1204000	Screw 5x40	2
11	1204100	Screw 4x25	2
12	1204200	Screw 4x10	4
13	1204300	Lock nut	2

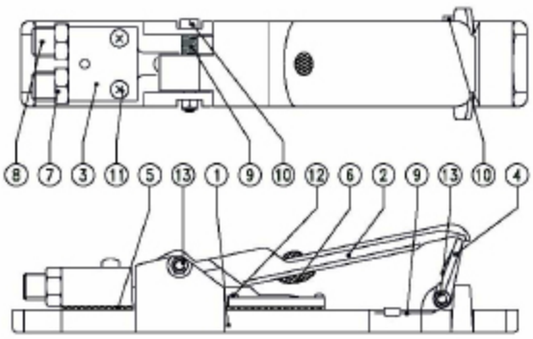

RCV-50 Remote Control System

The RCV-50 pressure-release pneumatic systems operate on the return-air principle. A handle installed at the nozzle connects pneumatically to inlet and outlet valves on the blast machine. With the safety petcock on the inlet valve closed, the operator depresses the handle which opens the inlet valve and closes the outlet to start blasting; releasing the handle reverses the process and blasting stops. This safety system stops blasting should the operator lose control of the nozzle. And when the blast session is over, the safety petcock is opened to prevent activation, even when the handle is depressed.

For applications that require frequent starts and stops, machines should be equipped with pressure-hold pneumatic remote controls, which keep the blast machine under pressure but allow the operator to start and stop blasting as frequently as needed. The machine is pressurized and depressurized manually, and the remote control handle controls the on/off of the abrasive and air independently. These systems are available in pneumatic and electric models.

ORDERING INFORMATION

Part no.	Decription
1122000	RCV-50 Remote Control Valve ½", complete
1122001	RCV-50/B Remote Control Valve ½", bare (excl. Silencer)
1122202	Silencer assembly
1203000	DMH-125 Deadman Handle for twin line remote control operation (for parts see data sheet RCV-125)

RCV-50 REMOTE CONTROL VALVE - Parts

Item	Part no.	Description		Qty
01	1122010	Valve housing		1
02	1122020	Bleed-off cylinder		1
03	1122030	Bleed-off manifold		1
04	1122040	Top cover		1
05	1122050	Inlet valve		1
06	1122060	Bleed-off cylinder		1
07	1122070	Piston		2
08	1122080	Bottom plate		1
09	1122090	Diaphragm	*	1
10	1122100	Piston seal	*	2
11	1122110	O-ring	*	3
12	1122120	Packing	*	2
13	1178000	Brass hex nipple ¼"		1
14	1122130	Piston screw M6 x 15		1
15	1122140	Nipple ½" BSP (M) x ⅜" BSP (M)		2
16	1122150	Cap screw M6 x 20		2
17	1122160	O-ring	*	1
18	1122170	Silencer housing		12
19	1122180	Silencer top plate		1
20	1122190	Silencer bottom plate		1
21	1122200	Silencer housing pin 5x215		1
22	1122210	Silencer cartridge		3
23	1122220	Lock nut		1
24	1122230	Union elbow		1
25	1122240	Union		1
26	1122250	Nipple ⅜" BSP (M) x ⅜" BSP (M)		1
27	1152000	Plug ¼" (not shown)		1
28	1152000	Ball valve ¼"		

All *-marked items are included in
RCV-50 Repair kit (art.nr. 1122203) in the quantities shown.

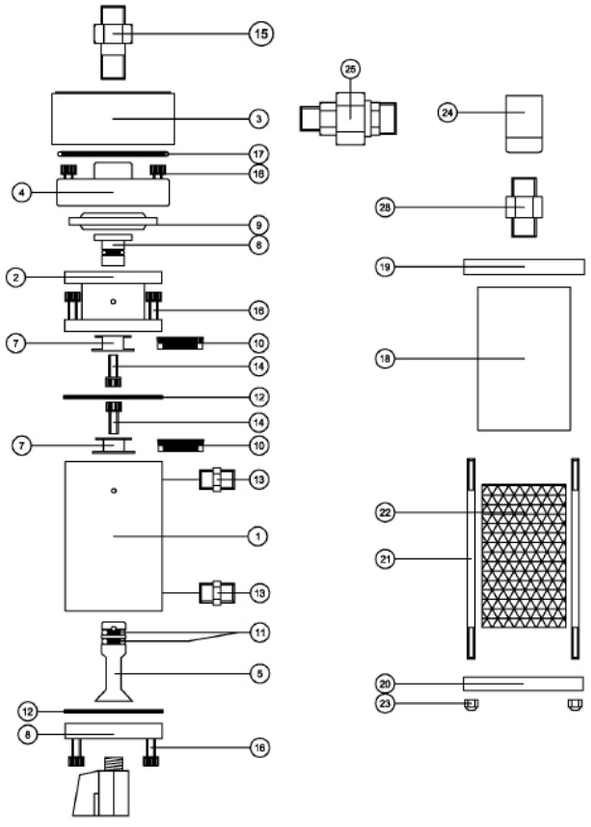

TWIN LINE HOSE ASSEMBLIES

1144300	Twin hose coupled, lenght of 5 mtrs.
1144400	Twin hose coupled, lenght of 20 mtrs.
1144500	Twin hose coupled, lenght of 40 mtrs.

ACV - Airblast Combo Valve

The Airblast Combo Valve is a normally closed, self sealing, fail-safe valve that combines the functions of the air inlet valve and blowdown valve, eliminating premature failure of the blowdown system. It is controlled with either pneumatic or electric remote controls. When the deadman control is pressed, the Combo Valve's unitized piston assembly instantly shifts, opening the air inlet and pinching the blowdown hose closed, starting the blasting operation. None of the usual wear or failures found in other blowdown systems can occur with the ComboValve.

The Airblast Combo Valve eliminates the need for abrasive traps, expensive plungers and diaphragms that can require frequent, unscheduled and costly downtime. The blowdown hose can be replaced in just a few minutes, and any service or repair can be safely performed without removing the complete valve. A large internal air passage minimizes pressure loss common to other systems.

Features:

- Rugged, non-corrosive body
- Twinline hose connection
- Unitized position assembly
- Blowdown hose pinch ram
- Large internal passage for improved blasting productivity

AIRBLAST COMBO VALVE - assembly

Part no.	Decription
6094000	ACV - Airblast Combo Valve 1¼"

AIRBLAST COMBO VALVE - Parts

Item	Part no.	Description		Qty
01	6094100	Cap		1
02	6094200	Pinch ram		1
03	6094300	Upper rod guide		1
04	6094400	Seal (upper rod)	*	1
05	6094500	Spring		1
06	6094600	Bolt, ⅜" x 6"		4
07	6094700	Cylinder		1
08	6094800	O-ring (shaft)	*	1
09	6094900	Snap ring	*	1
10	6095000	Seal (lower rod)	*	1
11	6095100	Piston		1
12	6095200	Shaft		1
13	6095300	Piston seal	*	1
14	6095400	Nut, ⅜"		4
15	6095500	Lower rod guide		1
16	6095600	O-ring (lower rod guide)	*	1
17	6095700	Base		1
18	6095800	Valve plug assembly	*	1
19	6096000	Vent, ⅛"		1
20	6096100	90° Swivel, ⅛" x ⅛"		1
21	6096200	90° Swivel, ¼" x ¼"		1

* Not sold separately, only as part of repair kit 6096400.

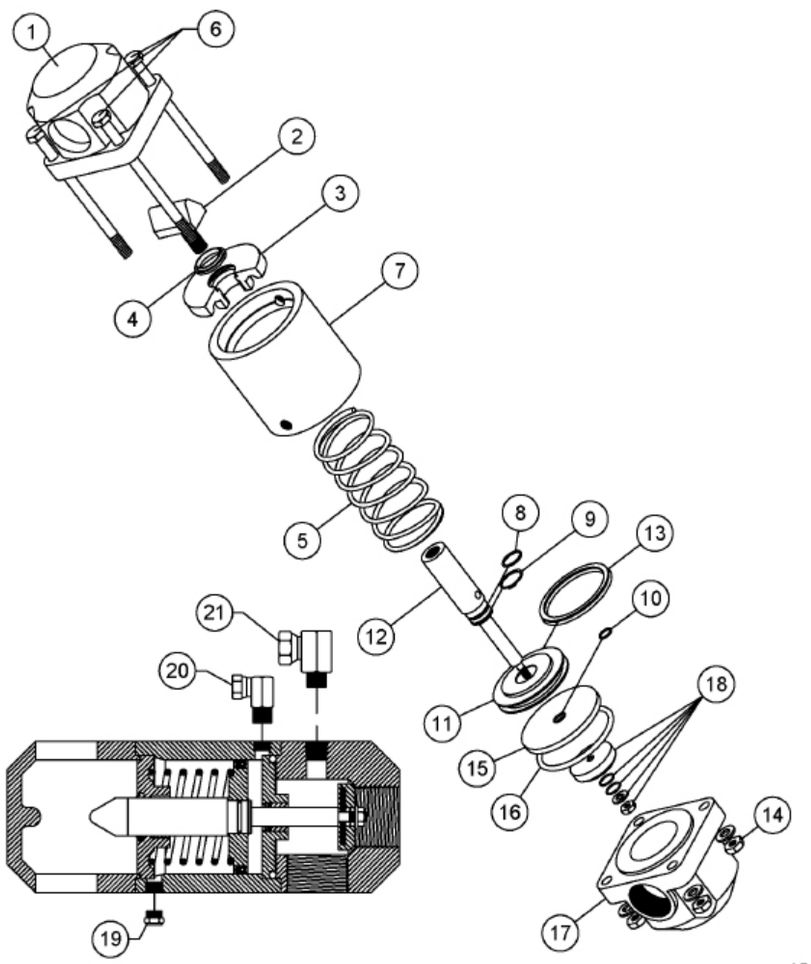

Deadman Systems - Electric

Some blasting jobs require the use of long runs of blast hose because the blast pot cannot be located near the blasting area. When using longer lengths of blast hose and using a pneumatic deadman handle, there is a delay in activation and deactivation of the blast machine. This problem is caused by the time taken for the pneumatic signal to reach the remote control valve. The longer the hose, the longer the delay.

Those who are using multiple lengths of blast hose can maintain a safer work environment by using a electric deadman handle with a more reliable response. The E-DMH/S Electric Deadman Systems enables the operation of the blast machine from a larger distance. The Electric Deadman System is recommended when the blast hose exceeds a lenght of 40 meters and will provide instant activation of the remote control valve and eliminate the delay encountered with pneumatic handles. The handle operates on 12/24 or 230 V power supply.

Advantages
- For immediate remote control operation
- Replaces twinline and pneumatic control handle
- An Electric Deadman System is quicker and less sensitive to failure

ELECTRIC DEADMAN HANDLES		
Part no.	**Decription**	
1203008	E-DMH Standard incl. cable and connector	
1203009	E-DMH Safety clip incl. cable and connector	
1203010	E-DMH Premium incl. cable and connector	
ELECTRIC DEADMAN SWITCHES - MAGNETIC		
1203011	E-DMS Magnetic incl. clip, cable and connector	
1203012	E-DMS Magnetic incl. hand band, cable and connector	

ELECTRIC CONTROL BOX	
1203018	Electric control box 230 V with 1,5 mtr. cable incl. connector (optional in 12/24 V)

EXTENSION CABLES	
1203014	Extension cable 10 mtr. incl. connectors
1203015	Extension cable 20 mtr. incl. connectors
1203016	Extension cable 30 mtr. incl. connectors
1203017	Extension cable 40 mtr. incl. connectors

Clearline Water Filter / Moisture Separator

Airblast blasting machines feature a highly efficient Clearline Moisture Separator.

The moisture separator prevents moisture and oil from the compressor entering the blast machine.

Often this is especially necessary when using old compressors, working at low temperatures or at a large distance from the compressor.

The Clearline Moisture Separator eliminates up to 98% of the condensate and oil from compressed air. This prevents the abrasive becoming damp and clogging the machine.

Available in the sizes ½” and 1½”.

CLEARLINE WATER FILTER / MOISTURE SEPARATOR	
Part no.	**Description**
4056001	CLEARLINE ½” for use with 1028 blast machine with ½” piping.
4057000	CLEARLINE 1½” with manual drain for use with blast machines with 1¼” piping.
4058000	CLEARLINE 1½” AUTOMATIC with automatic drain for use with blast machines with 1¼” piping.

SPARE PARTS CLEARLINE 1½”	
Part no.	**Description**
4057600	Bowl kit and sight glass, includes: - Bowl - Sigh glass assembly - O-ring - Manual drain assembly
4058100	Automatic drain option
4057300	40 micron filter

SPARE PARTS CLEARLINE ½”	
Part no.	**Description**
4056003	Particle filter element

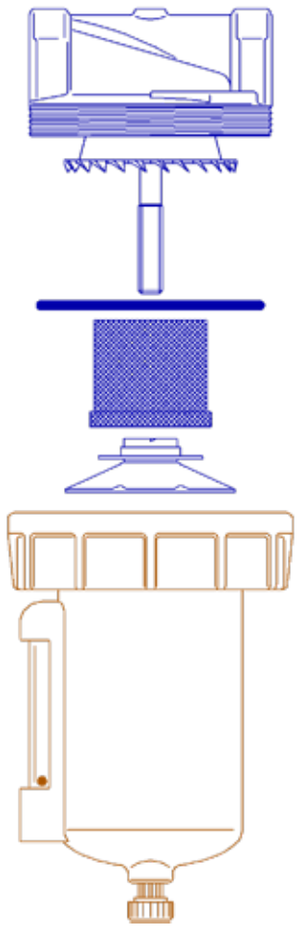

AP-7 Abrasive Control Valve

The Airblast AP-7 Abrasive Control Valve 1/2” is used to provide precise metering of abrasive from the blast pot to the blast hose.

One fixed, and one movable stainless steel metering plate provide long life and a high degree of metering adjustment, ensuring maximum productivity without abrasive wastage.

The AP-7 Abrasive Control Valve is best suited to blasting applications using expendable type abrasives, such as crushed glass and copper slag.

Airblast offers a full selection of metering valves. Contact Airblast to discuss which metering valve is most suitable for your specific application.

ORDERING INFORMATION	
Part no.	**Decription**
6026000	AP-7 Abrasive Control Valve ½”

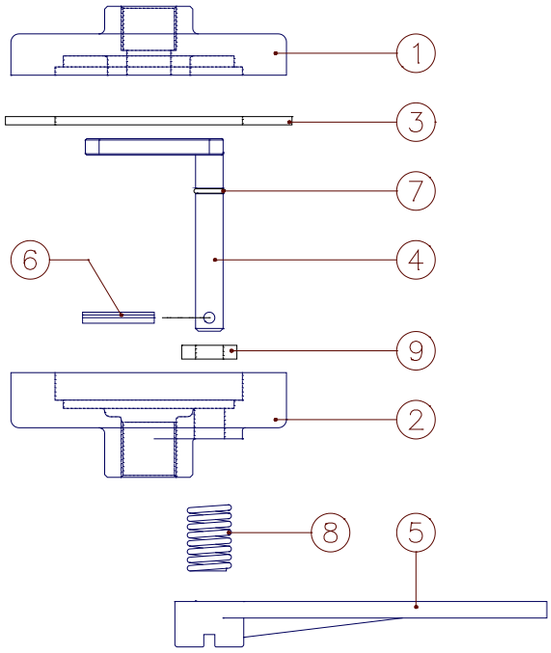

AP-7 Abrasive Control Valve - Parts			
Item	**Part no.**	**Description**	**Qty**
01	6027000	Top casting	1
02	6028000	Bottom casting	1
03	6029000	Valve body gasket	1
04	6030000	Metering plate and stem	1
05	6031000	Handle	1
06	6032000	Spring pin	1
07	6033000	O-ring	1
08	6034000	Spring	1
09	6035000	Washer	1

Flat Sand Valve

The Airblast Flat Sand Valve is used to provide metering of abrasive from the blast pot to the blast hose. With its unique 45° design, the FSV Flat Sand Valve permits a smooth, natural flow of abrasives into the blasting air stream.

The FSV Flat Sand Valve is best suited to blasting applications using expendable type abrasives, such as crushed glass and copper slag.

Airblast offers a full selection of metering valves. Contact Airblast to discuss which metering valve is most suitable for your specific application.

ORDERING INFORMATION

Part no.	Decription
6001000	FSV Flat Sand Valve 1¼”

FSV Flat Sand Valve - Parts

Item	Part no.	Description	Qty
01	6002000	Bolt M12 x 45 mm	4
02	6003000	Upper body	1
03	6004000	Rubber gasket	2
04	6005000	Valve	1
05	6006000	Disc	1
06	6007000	Lower body	1
07	6008000	Nut M12	8
08	6009000	Head cap screw M6 x 25 mm	1
09	6010000	Handle bolt spacer	1
10	6011000	Washer 6 mm	2

FSV Flat Sand Valve - Parts

Item	Part no.	Description	Qty
11	6012000	Wing nut M6	1
12	6013000	Gauge unit	1
13	6014000	Set screw M6	2
14	6015000	Handle pin	1
15	6016000	Control handle	1
16	6017000	Compressing spring	1
17	6018000	Packing gland	1
18	6019000	Packing	1
19	6020000	Gasket	1
20	6021000	Inspection plate bolt M8 x 35 mm	2
21	6022000	O-ring	1
22	6023000	Inspection plate	1
23	6024000	Wing nut M8	2
24	6025000	FSV bolt	2

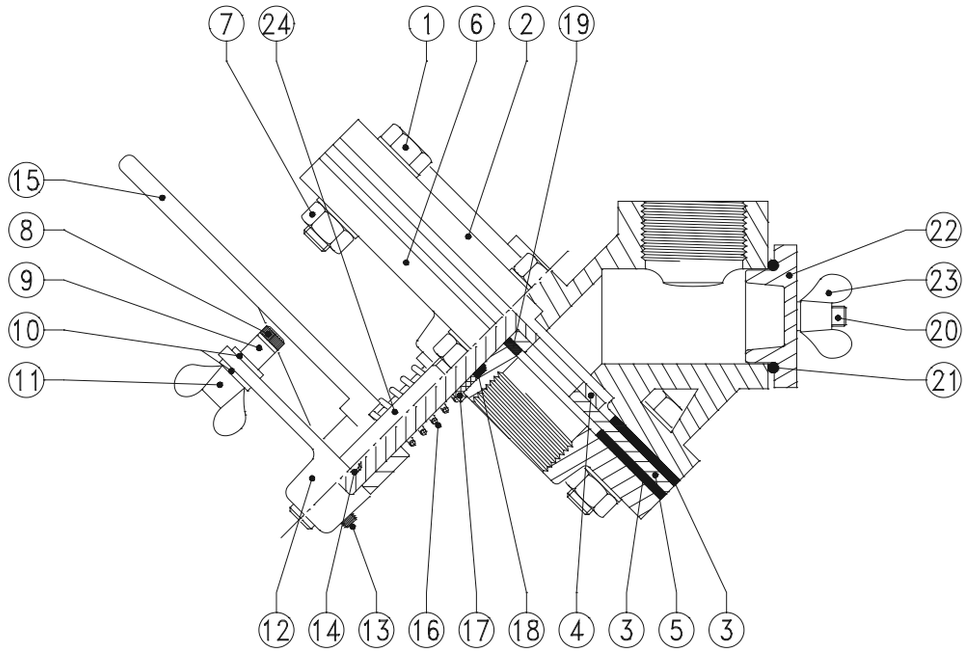

SGV Steel Grit Valve

The Airblast SGV Steel Grit Valve is used to provide metering of abrasive into the compressed air flow at the outlet of a blast machine.

The SGV Steel Grit Valve is suitable for metering heavy or aggressive abrasive materials, such as steel shot and grit, chilled iron grit or aluminium oxide. The SGV Steel Grit Valve design prevents the valve body from coming into contact with the abrasive stream. The abrasive stream only touches the rubber liner, which may be quickly replaced when worn. The abrasive is metered by means of closing the rubber pipe by a adjustment screw.

Airblast offers a full selection of metering valves. Contact Airblast to discuss which metering valve is most suitable for your specific application.

ORDERING INFORMATION

Part no.	Decription
6062000	SGV Steel Grit Valve 1”

SGV Steel Grit Valve - Parts

Item	Part no.	Description	Qty
1a 1b	6062200	Upper body Lower body	1 1
2	6062100	Rubber sleeve 1” ID	1
3	6062500	Adjusting screw	1
4	6062400	Yoke	1
5	6062401	Hex bolt M8x1.25x35 with spring washer	4
6	6062402	Hex nut M8x1.25x35	4
7	6062600	Washer	1
8	6062601	Roller pin	1
9	6062700	Control handle	1

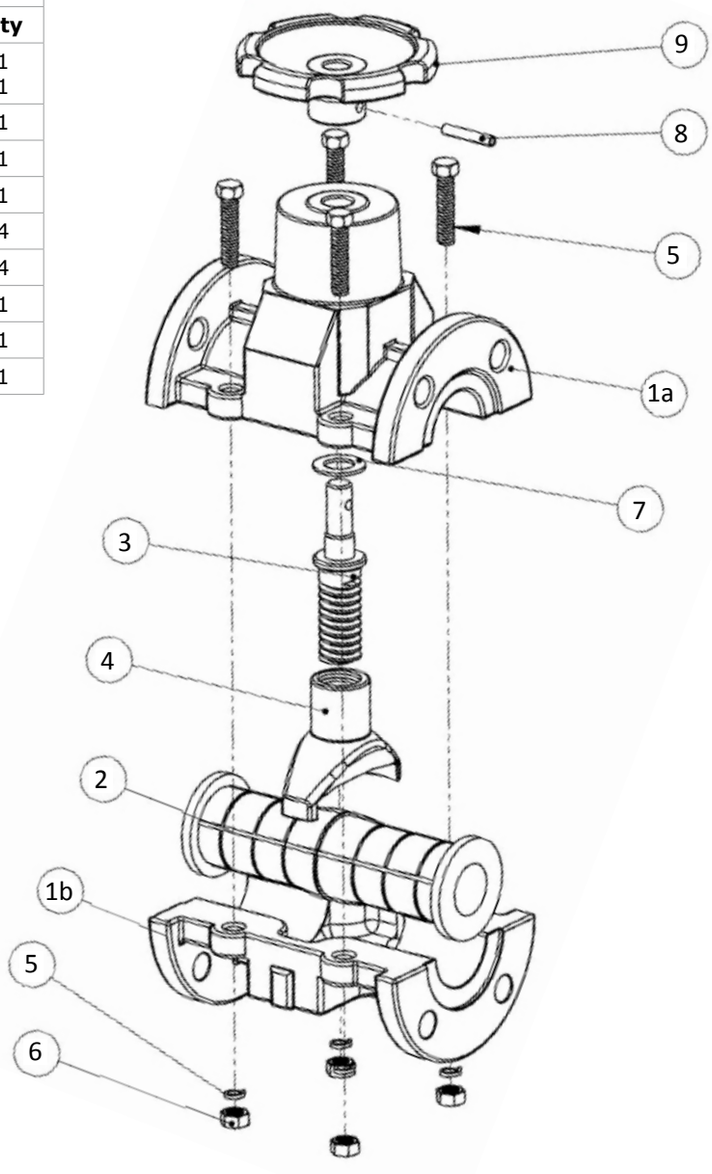

GVA Abrasive Membrame Valve

The Airblast GVA Abrasive Membrane Valve is used to provide precise metering of abrasive into the compressed air flow at the outlet of a blast machine.

The GVA Abrasive Membrane Valve design prevents the valve top body from coming into contact with the abrasive stream. The abrasive stream only touches the valve bottom and the membrane, which may be quickly replaced when worn. The abrasive is metered by means of closing the membrane by a metering screw.

Airblast offers a full selection of metering valves. Contact Airblast to discuss which metering valve is most suitable for your specific application.

ORDERING INFORMATION	
Part no.	**Decription**
6070000	GVA 12 - Abrasive Membrane Valve ½”
6070500	GVA 25 - Abrasive Membrane Valve 1”
6071000	GVA 32 - Abrasive Membrane Valve 1¼”
6071500	GVA 38 - Abrasive Membrane Valve 1½”

GVA Abrasive Membrane Valves - Parts	
Part no.	**Description**
6071100	Membrane for GVA-25, GVA-32 and GVA-38
6071200	Membrane for GVA-12

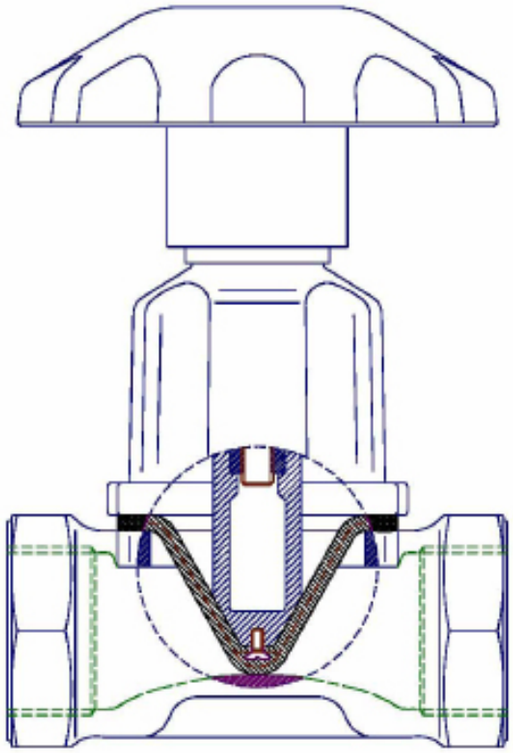

AMV - Airblast Micro Valve

The AMV Airblast Micro Valve offers one of the highest degrees of abrasive metering adjustment. This permits precise, constant abrasive flow to the blast nozzle, resulting in significant cost savings due to virtually no abrasive wastage.

Suitable for use with all types of abrasives such as garnet, fine mesh aluminum oxide, as well as steel shot and grit the AMV is uses considerably less abrasives when compared with the other valves, combined with maximum blasting productivity and reduced downtime.

Features:

- low profile design
- rugged non-corrosive body
- urethane sleeve protects valve core
- case hardened nipples provide superior wear resistance
- easy to maintain, fewer replacement parts
- infinite metering capabilities
- hardened steel plunger for long operating life
- complete range of replacement parts available

ORDERING INFORMATION

Part no.	Decription
6080000	Micro Valve 1¼" with Urethane Sleeve

AMV Abrasive Metering Valve - Parts

Item	Part no.	Description		Qty
01	6081000	Control knob		1
02	6081500	Roll pin	*	1
03	6082000	Bolt		2
04	6082500	Cap		1
05	6083000	Plunger	*	1
06	6083500	Body		1
07	6084000	Plunger seal	*	1
08	6084500	Urethane sleeve	*	1
09	6085000	Gasket	*	1
10	6086600	Pipe nipple 1¼" BSPT (M) x 1¼" BSPT (M)		1
11	6082100	Washer		2
	6087000	Repair kit (consist of *-marked items)		

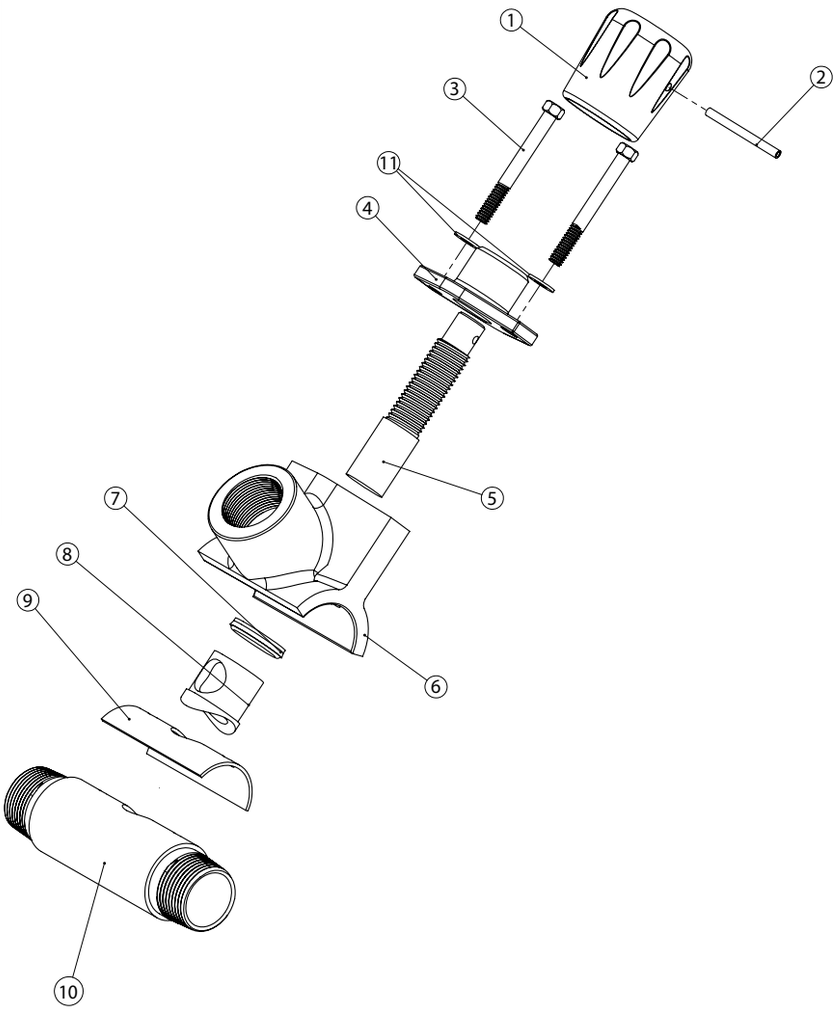

Thompson Valve

The original Thompson Valve is a normally closed, self sealing, abrasive metering valve known for its instant, smooth response to either pneumatic or electric deadman controls. This fail-safe valve shuts off abrasive flow to the nozzle and seals the tank at the same instant. A remote abrasive cutoff is available, allowing the operator to stop the flow of media while continuing a constant flow of air. This provides a quick and easy way to clear the blast hose and blasting area of abrasive.

Designed for superior operator safety, the Thompson Valve is ideal for multiple outlet use and is easily adaptable to most existing blasting systems.

Features

- One knob precisely controls abrasive (all types) flow
- Standard urethane sleeve for normal operation, or optional tungsten carbide sleeve for extended life
- Design minimizes air turbulence in mixing chamber, providing even media flow
- A short path helps ensure constant abrasive media flow
- Orifice is sized for precise metering of abrasive
- Rugged, non-corrosive body

ORDERING INFORMATION	
Part no.	**Decription**
6088000	Thompson Valve 1” with Tungsten Carbide sleeve
6088500	Thompson Valve 1” with Urethane sleeve
6089000	Thompson Valve 1¼” with Tungsten Carbide sleeve
6089500	Thompson Valve 1¼” with Urethane sleeve
6090000	Thompson Valve 1½” with Tungsten Carbide sleeve
6090500	Thompson Valve 1½” with Urethane sleeve

THOMPSON VALVE Abrasive Metering Valve - Parts

Item	Part no.	Description	TC	U
01	6091000	Control knob		
02	6091100	Cap		
03	6091200	Bump ring		
04	6091300	Spring		
05	6091400	Nut		
06	6091500	Piston seal	*	**
07	6091600	Piston		
08	6091700	Tungsten carbide plunger	*	**
09	6091800	Cylinder		
10	6091900	Plunger seal	*	**
11a	6092900	Tungsten carbide sleeve	*	
11b	6092000	Urethane sleeve		**
12	6092100	Base		
13	6092200	Bolt		
14a	6092300	Pipe nipple 1” M x 1” M		
14b	6092400	Pipe nipple 1¼” M x 1¼” M		
14c	6092500	Pipe nipple 1½” M x 1½” M		
15	6099250	Sleeve pin		
16	6092600	O-ring		**
17	6092700	Insert		**
18	6092800	Seat		**
	6093000	Repair kit for TC sleeve, consist of *-marked items		
	6093100	Repair kit for U sleeve, consist of **-marked items		

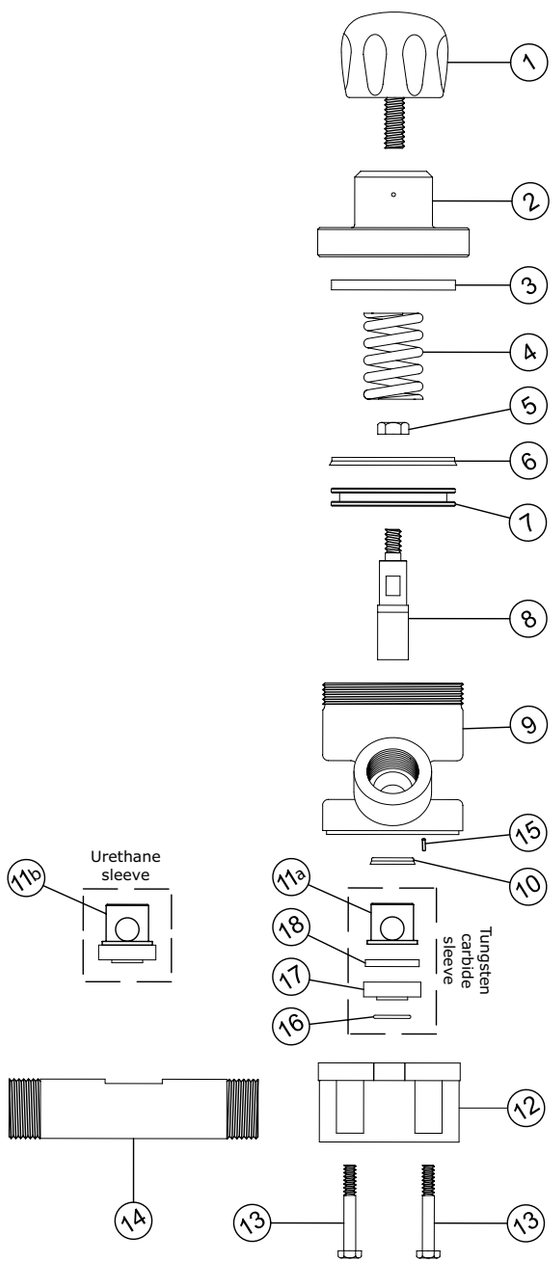

Thompson Valve II

The Thompson Valve II is a next-generation Thompson Valve designed to provide the ultimate in metering performance. It is a normally closed, self sealing, abrasive metering valve with instant, smooth response to either pneumatic or electric deadman controls. This fail-safe valve shuts off abrasive flow to the nozzle and seals the tank at the same instant. A remote abrasive cutoff is available, allowing the operator to stop the flow of media while continuing a constant flow of air. This provides a quick and easy way to clear the blast hose and blasting area of abrasive. The Thompson Valve II is ideal for multiple outlet use and is easily adaptable to most existing blasting systems. A lower overall profile allows more room between valve and blast pot for easy access.

Building on the original, market leading Thompson Valve, the Thompson Valve II offers an even higher level of performance, enhanced serviceability and longer life.

Features

- Spring is preloaded with spring retainer (not shown). Allows for easy spring replacement
- Triple plunger seals prevent media from entering piston chamber and extend valve life
- Bolt-on cap provides easier service access to piston and piston seal
- A short path helps ensure constant abrasive media flow
- Orifice is sized for precise metering of abrasive
- Rugged, non-corrosive body
- O-ring on sleeve prevents media entrapment, reduces sliding friction
- Larger seat allows for better media flow into the air stream. A shallower seat angle prevents media from being trapped under the plunger, extending part life
- Middle section is separate from cylinder to provide easier removal of sleeve, plunger seal & seat during service

Airblast offers a full selection of metering valves. Contact Airblast to discuss which metering valve is most suitable for your specific application.

ORDERING INFORMATION

Part no.	Decription
6093200	Thompson Valve II - 1” with Tungsten Carbide sleeve
6093300	Thompson Valve II - 1” with Urethane sleeve
6093400	Thompson Valve II - 1¼” with Tungsten Carbide sleeve
6093500	Thompson Valve II - 1¼” with Urethane sleeve
6093600	Thompson Valve II - 1½” with Tungsten Carbide sleeve
6093700	Thompson Valve II - 1½” with Urethane sleeve

THOMPSON VALVE II - Abrasive Metering Valve - Parts					
Item	**Part no.**	**Description**	**TC**	**U**	**Qty**
01	6099010	Control knob			1
02	6099020	Breather vent			1
03	6099030	Spring retainer			1
04	6099040	O-ring	*	**	1
05	6099050	Washer			1
06	6099060	Hex bolt, ⅜" UNC x 1¼" Lg.			1
07	6099070	Cap plate			1
08	6099080	Cap gasket	*	**	1
10	6091200	Bump ring			1
11	6099090	Spring			1
12	6099100	Nut			1
13	6091500	Piston seal	*	**	1
14	6099110	Piston			1
15	6099120	Tungsten carbide plunger	*	**	1
16	6099130	Cylinder			1
17	6091900	Plunger seal (1x)			1
18	6099140	Plunger seal (2x)			2
19	6099150	Body			1
20	6099160	Seat			1
21a	6099170	Base 1" NPT			1
21b	6099180	Base 1¼" NPT			1
21c	6099190	Base 1½" NPT			1
22	6099200	Hex bolt, ⅜" UNC x 4¾" Lg.			1
23	6099210	Plug			1
24	6099220	O-ring			1
25a	6099230	Tungsten carbide sleeve	*		1
25b	6099240	Urethane sleeve		**	1
26	6099250	Sleeve pin			1
	6093800	Repair kit for Tungsten Carbide sleeve, consist of *-marked items			
	6093900	Repair kit for Urethane sleeve, consist of **-marked items			

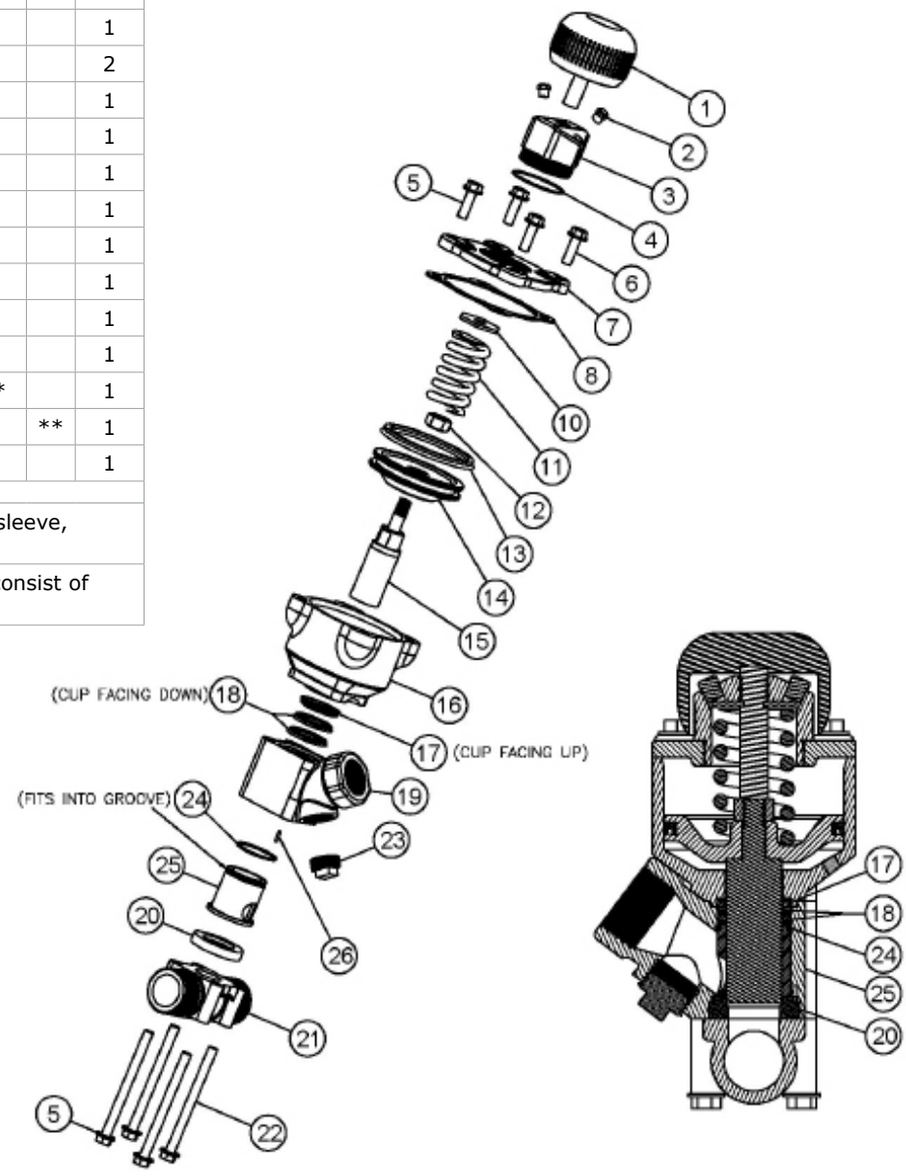

Section 2 - Nozzles/Holders/Hoses/Couplings

AIRBLAST

Product	Page
Blast nozzles - ATSD(X) Tungsten carbide long venturi nozzles with aluminium jacket	38
Blast nozzles - ATJD(X) Tungsten carbide medium venturi nozzles with aluminium jacket	39
Blast nozzles - AT(L) Tungsten carbide short venturi nozzles with aluminium jacket	40
Blast nozzles - RJL Tungsten carbide long venturi nozzles with rubber jacket	41
Blast nozzles - AHTN(X) Tungsten carbide long venturi nozzles with Hi-Tec jacket	42
Blast nozzles - ATCUX(S) Tungsten carbide long venturi nozzles with urethane jacket	43
Blast nozzles - ADV Tungsten carbide double venturi nozzles with aluminium jacket	44
Blast nozzles - ATST Tungsten carbide stick-up nozzles with aluminium jacket	45
Blast nozzles - ABSN(X) Silicon nitride long venturi nozzles with polyurethane jacket	46
Blast nozzles - ABSCX Silicon carbide long venturi nozzles with polyurethane jacket	47
Blast nozzles - ABC(X) Boron carbide long venturi nozzles with aluminium jacket	48
Blast nozzles - ABCXL Boron carbide extra long venturi nozzles with aluminium jacket	49
Blast nozzles - ABCS Boron carbide stick-up nozzles with aluminium jacket	50
Blast nozzles - ASB Tungsten carbide spinnerblast nozzles with aluminium jacket	51
Blast nozzles - WIN Tungsten carbide water injection nozzles with aluminium jacket	52
Nozzle orifice gauge	53
Blast nozzles - AAM Tungsten carbide angle nozzles with aluminium jacket	54
Blast nozzles & holders - ABCM / ABCL / ABCLI / ANH Boron carbide flange type/lead-in nozzles	55
Blast nozzles - ABCFT / ABCA / ABCC / ABCR Boron carbide flange type nozzles	56
Nozzle holders - NNH/CHE - Nylon/Aluminium	57
SKG / KIG / KAG / SL - Cast iron air hose couplings and clamps	58
CQT / CQN / CQG - Couplings - nylon and cast iron	59
CCC / OF / IF / M / F - Quick connect couplings - brass	60
Camlock couplings system - aluminium	61
Blast hose / nozzle pressure gauge / whip check safety cable	62
Polyurethane suction / discharge hose	63
Rubber suction / discharge hose	64
Rubber suction / discharge hose - heavy duty	65
Air pressure hose / whip check safety cable	66
High pressure paint spray hose	67

ATSD(X) Tungsten Carbide Blasting Nozzles

The ATSD(X) range comprises of Tungsten Carbide lined long venturi nozzles with Aluminum Jackets. Tungsten Carbide is the liner material of choice for the majority of contractors due to long life and impact resistance - the Aluminum Jacket adds to the rugged character of the nozzle. Long venturi nozzles are used in standard applications in which the blaster operates at a distance of more than 30 cm (or 12”) from the surface.

The ATSD nozzle has a 25 mm (1”) inlet and the ATJDX has a 32 mm (1¼”) inlet - both are available with a standard large thread (/50) or fine thread.

Airblast high velocity long venturi style nozzles have been designed to maximize blast cleaning rates and provide uniform abrasive distribution. The venturi design accelerates the air / abrasive mix as it exits the nozzle providing additional momentum – this can increase productivity and reduce abrasive consumption by up to 40% when compared with straight bore nozzles.

ORDERING INFORMATION

Part no.	Description	Orifice	Lenght	Inlet
2001000	ATSD–3 TC Nozzle with fine thread	4,8 mm	135 mm	25 mm
2002000	ATSD–4 TC Nozzle with fine thread	6,4 mm	135 mm	25 mm
2003000	ATSD–5 TC Nozzle with fine thread	8,0 mm	145 mm	25 mm
2004000	ATSD–6 TC Nozzle with fine thread	9,5 mm	170 mm	25 mm
2005000	ATSD–7 TC Nozzle with fine thread	11,0 mm	200 mm	25 mm
2006000	ATSD–8 TC Nozzle with fine thread	13,0 mm	230 mm	25 mm
2007000	ATSDX–4 TC Nozzle with fine thread	6,4 mm	135 mm	32 mm
2008000	ATSDX–5 TC Nozzle with fine thread	8,0 mm	145 mm	32 mm
2009000	ATSDX–6 TC Nozzle with fine thread	9,5 mm	170 mm	32 mm
2010000	ATSDX–7 TC Nozzle with fine thread	11,0 mm	200 mm	32 mm
2011000	ATSDX–8 TC Nozzle with fine thread	13,0 mm	230 mm	32 mm
2012000	ATSDX–10 TC Nozzle with fine thread	16,0 mm	230 mm	32 mm
2013000	ATSDX–12 TC Nozzle with fine thread	19,0 mm	230 mm	32 mm
2014000	ATSD–3/50 TC Nozzle with large 50 mm thread	4,8 mm	135 mm	25 mm
2015000	ATSD–4/50 TC Nozzle with large 50 mm thread	6,4 mm	135 mm	25 mm
2016000	ATSD–5/50 TC Nozzle with large 50 mm thread	8,0 mm	145 mm	25 mm
2017000	ATSD–6/50 TC Nozzle with large 50 mm thread	9,5 mm	170 mm	25 mm
2018000	ATSD–7/50 TC Nozzle with large 50 mm thread	11,0 mm	200 mm	25 mm
2019000	ATSD–8/50 TC Nozzle with large 50 mm thread	13,0 mm	230 mm	25 mm
2020000	ATSDX–4/50 TC Nozzle with large 50 mm thread	6,4 mm	135 mm	32 mm
2021000	ATSDX–5/50 TC Nozzle with large 50 mm thread	8,0 mm	145 mm	32 mm
2022000	ATSDX–6/50 TC Nozzle with large 50 mm thread	9,5 mm	170 mm	32 mm
2023000	ATSDX–7/50 TC Nozzle with large 50 mm thread	11,0 mm	200 mm	32 mm
2024000	ATSDX–8/50 TC Nozzle with large 50 mm thread	13,0 mm	230 mm	32 mm
2025000	ATSDX–10/50 TC Nozzle with large 50 mm thread	16,0 mm	230 mm	32 mm
2026000	ATSDX–12/50 TC Nozzle with large 50 mm thread	19,0 mm	230 mm	32 mm

The standard size thread of the nozzle is 50 mm, which is indicated by /50 in the part number. Without this indication the nozzle has a fine thread of 41 mm.

See page 242 and 243 for technical info such as nozzle pressure, service life, air requirement/volume, etc.

ATJD(X) Tungsten Carbide Medium Blasting Nozzles

The ATJD(X) range comprises of Tungsten Carbide lined medium venturi nozzles with Aluminum Jackets. Tungsten Carbide is the liner material of choice for the majority of contractors due to long life and impact resistance - the Aluminum Jacket adds to the rugged character of the nozzle. Medium venturi nozzles are mainly used in applications in which the blasting is conducted in a confined space - therefore the blaster will normally operate at a distance of less than 30 cm (12”) from the surface.

The ATJD nozzle has a 25 mm (1”) inlet and the ATJDX has a 32 mm (1¼”) inlet - both are available with a standard large thread (/50) or fine thread.

Airblast high velocity venturi style nozzles have been designed to maximize blast cleaning rates and provide uniform abrasive distribution. The venturi design accelerates the air / abrasive mix as it exits the nozzle providing additional momentum – this can increase productivity and reduce abrasive consumption by up to 40% when compared with straight bore nozzles.

ORDERING INFORMATION

Part no.	Description	Orifice	Lenght	Inlet
2027000	ATJD-3 TC Nozzle with fine thread	4,8 mm	85 mm	25 mm
2028000	ATJD-4 TC Nozzle with fine thread	6,4 mm	85 mm	25 mm
2029000	ATJD-5 TC Nozzle with fine thread	8,0 mm	85 mm	25 mm
2030000	ATJD-6 TC Nozzle with fine thread	9,5 mm	85 mm	25 mm
2031000	ATJD-7 TC Nozzle with fine thread	11,0 mm	85 mm	25 mm
2032000	ATJD-8 TC Nozzle with fine thread	13.0 mm	85 mm	25 mm
2032900	ATJDX-4 TC Nozzle with fine thread	6,4 mm	85 mm	32 mm
2033000	ATJDX-5 TC Nozzle with fine thread	8,0 mm	85 mm	32 mm
2034000	ATJDX-6 TC Nozzle with fine thread	9,5 mm	85 mm	32 mm
2035000	ATJDX-7 TC Nozzle with fine thread	11,0 mm	85 mm	32 mm
2036000	ATJDX-8 TC Nozzle with fine thread	13.0 mm	85 mm	32 mm
2037000	ATJDX-10 TC Nozzle with fine thread	16.0 mm	85 mm	32 mm
2038000	ATJD-3/50 TC Nozzle with large 50 mm thread	4,8 mm	85 mm	25 mm
2039000	ATJD-4/50 TC Nozzle with large 50 mm thread	6,4 mm	85 mm	25 mm
2040000	ATJD-5/50 TC Nozzle with large 50 mm thread	8,0 mm	85 mm	25 mm
2041000	ATJD-6/50 TC Nozzle with large 50 mm thread	9,5 mm	85 mm	25 mm
2042000	ATJD-7/50 TC Nozzle with large 50 mm thread	11,0 mm	85 mm	25 mm
2043000	ATJD-8/50 TC Nozzle with large 50 mm thread	13.0 mm	85 mm	25 mm
2043900	ATJDX–4/50 TC Nozzle with large 50 mm thread	6,4 mm	85 mm	32 mm
2044000	ATJDX–5/50 TC Nozzle with large 50 mm thread	8,0 mm	85 mm	32 mm
2045000	ATJDX–6/50 TC Nozzle with large 50 mm thread	9,5 mm	85 mm	32 mm
2046000	ATJDX–7/50 TC Nozzle with large 50 mm thread	11,0 mm	85 mm	32 mm
2047000	ATJDX–8/50 TC Nozzle with large 50 mm thread	13.0 mm	85 mm	32 mm
2048000	ATJDX-10/50 TC Nozzle with large 50 mm thread	16.0 mm	85 mm	32 mm

The standard size thread of the nozzle is 50 mm, which is indicated by /50 in the part number. Without this indication the nozzle has a fine thread of 41 mm.

See page 242 and 243 for technical info such as nozzle pressure, service life, air requirement/volume, etc.

AT(L) Tungsten Carbide Short Blasting Nozzles

The AT(L) range comprises of Tungsten Carbide lined short venturi nozzles with Aluminium Jackets. Tungsten Carbide is the liner material of choice for the majority of contractors due to long life and impact resistance - the Aluminium Jacket (adds to the rugged character of the nozzle).

This range is designed to fit to 13 mm (½") blast hose and to be used on 18 liter blast pots or in blast cabinets. The ATL nozzles have a large thread (28 mm) and the AT nozzles have a finer thread (26 mm).

Airblast high velocity venturi style nozzles have been designed to maximize blast cleaning rates and provide uniform abrasive distribution. The venturi design accelerates the air / abrasive mix as it exits the nozzle providing additional momentum – this can increase productivity and reduce abrasive consumption by up to 40% when compared with straight bore nozzles.

ORDERING INFORMATION

Part no.	Description	Orifice	Lenght	Inlet
2085000	AT-2 TC Nozzle with fine 26 mm thread	3,2 mm	45 mm	13 mm
2086000	AT-3 TC Nozzle with fine 26 mm thread	4,8 mm	45 mm	13 mm
2087000	AT-4 TC Nozzle with fine 26 mm thread	6,5 mm	45 mm	13 mm
2088000	AT-5 TC Nozzle with fine 26 mm thread	8,0 mm	45 mm	13 mm
2089000	AT-6 TC Nozzle with fine 26 mm thread	9,5 mm	45 mm	13 mm
2090000	AT-8 TC Nozzle with fine 26 mm thread	13,0 mm	45 mm	13 mm
2085100	ATL-2 TC Nozzle with large 28 mm thread	3,2 mm	45 mm	13 mm
2086100	ATL-3 TC Nozzle with large 28 mm thread	4,8 mm	45 mm	13 mm
2087100	ATL-4 TC Nozzle with large 28 mm thread	6,5 mm	45 mm	13 mm
2088100	ATL-5 TC Nozzle with large 28 mm thread	8,0 mm	45 mm	13 mm
2089100	ATL-6 TC Nozzle with large 28 mm thread	9,5 mm	45 mm	13 mm
2090100	ATL-8 TC Nozzle with large 28 mm thread	13,0 mm	45 mm	13 mm

See page 242 and 243 for technical info such as nozzle pressure, service life, air requirement/volume, etc.

RJL Tungsten Carbide Blasting Nozzles

The RJL range comprises of Tungsten Carbide lined long venturi nozzles with a Rubber Jacket. Tungsten Carbide is the liner material of choice for the majority of contractors due to long life and impact resistance - the Rubber Jacket provides impact resistance for tough environments. Long venturi nozzles are used in standard applications in which the blaster operates at a distance of more than 30 cm (or 12”) from the surface.

The RJL series are available with a 32 mm (1¼”) inlet and a large thread, with an orifice range from 4,8 mm to 19 mm.

Airblast high velocity long venturi style nozzles have been designed to maximize blast cleaning rates and provide uniform abrasive distribution. The venturi design accelerates the air / abrasive mix as it exits the nozzle providing additional momentum – this can increase productivity and reduce abrasive consumption by up to 40% when compared with straight bore nozzles.

ORDERING INFORMATION

Part no.	Description	Orifice	Lenght	Inlet
2049000	RJL-3/50 TC Nozzle with large 50 mm thread	4,8 mm	135 mm	32 mm
2050000	RJL-4/50 TC Nozzle with large 50 mm thread	6,5 mm	135 mm	32 mm
2051000	RJL-5/50 TC Nozzle with large 50 mm thread	8,0 mm	145 mm	32 mm
2052000	RJL-6/50 TC Nozzle with large 50 mm thread	9,5 mm	170 mm	32 mm
2053000	RJL-7/50 TC Nozzle with large 50 mm thread	11,0 mm	200 mm	32 mm
2054000	RJL-8/50 TC Nozzle with large 50 mm thread	13.0 mm	235 mm	32 mm
2054100	RJL-10/50 TC Nozzle with large 50 mm thread	16.0 mm	235 mm	32 mm
2054200	RJL-12/50 TC Nozzle with large 50 mm thread	19.0 mm	235 mm	32 mm

See page 242 and 243 for technical info such as nozzle pressure, service life, air requirement/volume, etc.

AHTN(X) Tungsten Carbide Blasting Nozzles

The AHTN(X) range comprises of tungsten carbide lined long venturi nozzles with durable Hi-Tec. Tungsten Carbide is the liner material of choice for the majority of contractors due to long life and impact resistance - the Hi-Tec Jacket adds to the durable character of the nozzle. Long venturi nozzles are used in standard applications in which the blaster operates at a distance of more than 30 cm (or 12”) from the surface.

Airblast high velocity venturi style nozzles have been designed to maximize blast cleaning rates and provide uniform abrasive distribution. The venturi design accelerates the air / abrasive mix as it exits the nozzle providing additional momentum – this can increase productivity and reduce abrasive consumption by up to 40% when compared with straight bore nozzles.

ORDERING INFORMATION

The AHTN nozzle has a 25 mm (1”) inlet and a large 50 mm thread.

Part no.	Description	Orifice	Inlet
2410000	AHTN-3/50 TC Nozzle with large 50 mm thread	4,8 mm	25 mm
2411000	AHTN-4/50 TC Nozzle with large 50 mm thread	6,4 mm	25 mm
2412000	AHTN-5/50 TC Nozzle with large 50 mm thread	8,0 mm	25 mm
2413000	AHTN-6/50 TC Nozzle with large 50 mm thread	9,5 mm	25 mm
2414000	AHTN-7/50 TC Nozzle with large 50 mm thread	11,0 mm	25 mm
2415000	AHTN-8/50 TC Nozzle with large 50 mm thread	13,0 mm	25 mm

The AHTN nozzle has a 32 mm (1¼”) inlet and a large 50 mm thread.

Part no.	Description	Orifice	Inlet
2416000	AHTNX-3/50 TC Nozzle with large 50 mm thread	4,8 mm	32 mm
2417000	AHTNX-4/50 TC Nozzle with large 50 mm thread	6,4 mm	32 mm
2418000	AHTNX-5/50 TC Nozzle with large 50 mm thread	8,0 mm	32 mm
2419000	AHTNX-6/50 TC Nozzle with large 50 mm thread	9,5 mm	32 mm
2420000	AHTNX-7/50 TC Nozzle with large 50 mm thread	11,0 mm	32 mm
2421000	AHTNX-8/50 TC Nozzle with large 50 mm thread	13,0 mm	32 mm

See page 242 and 243 for technical info such as nozzle pressure, service life, air requirement/volume, etc.

ATCUX(S) Tungsten Carbide Blasting Nozzles

The ATCUX(S) range comprises of tungsten carbide lined long venturi nozzles with lightweight durable urethane jacket. Tungsten Carbide is the liner material of choice for the majority of contractors due to long life and impact resistance - the Urethane Jacket adds to the durable character of the nozzle. Long venturi nozzles are used in standard applications in which the blaster operates at a distance of more than 30 cm (or 12”) from the surface.

Airblast high velocity venturi style nozzles have been designed to maximize blast cleaning rates and provide uniform abrasive distribution. The venturi design accelerates the air / abrasive mix as it exits the nozzle providing additional momentum – this can increase productivity and reduce abrasive consumption by up to 40% when compared with straight bore nozzles.

ORDERING INFORMATION

The ATCUXS nozzle has a 25 mm (1”) inlet and large 50 mm thread. Colour: blue

Part no.	Description	Orifice	Lenght	Inlet
2474500	ATCUXS–3/50 TC Nozzle with large 50 mm thread	4,8 mm	74 mm	25 mm
2475000	ATCUXS–4/50 TC Nozzle with large 50 mm thread	6,5 mm	74 mm	25 mm
2476000	ATCUXS–5/50 TC Nozzle with large 50 mm thread	8,0 mm	74 mm	25 mm
2477000	ATCUXS–6/50 TC Nozzle with large 50 mm thread	9,5 mm	74 mm	25 mm
2478000	ATCUXS–7/50 TC Nozzle with large 50 mm thread	11,0 mm	74 mm	25 mm
2479000	ATCUXS–8/50 TC Nozzle with large 50 mm thread	12,5 mm	74 mm	25 mm

The ATCUX nozzle has a 32 mm (1¼”) inlet and a large 50 mm thread. Colour: green

Part no.	Description	Orifice	Lenght	Inlet
2470000	ATCUX–4/50 TC Nozzle with large 50 mm thread	6,5 mm	130 mm	32 mm
2471000	ATCUX–5/50 TC Nozzle with large 50 mm thread	8,0 mm	150 mm	32 mm
2472000	ATCUX–6/50 TC Nozzle with large 50 mm thread	9,5 mm	170 mm	32 mm
2473000	ATCUX–7/50 TC Nozzle with large 50 mm thread	11,0 mm	200 mm	32 mm
2474000	ATCUX–8/50 TC Nozzle with large 50 mm thread	12,5 mm	210 mm	32 mm

See page 242 and 243 for technical info such as nozzle pressure, service life, air requirement/volume, etc.

ADV Tungsten Carbide Double Venturi Nozzles

The double venturi offers a 35% larger blast pattern than a standard long venturi with only a slight loss in abrasive velocity.

Designed to be used on jobs where medium cutting action is required with a more even dispersion of abrasive throughout the larger blast pattern.

Airblast high velocity venturi style nozzles have been designed to maximize blast cleaning rates and provide uniform abrasive distribution. The venturi design accelerates the air / abrasive mix as it exits the nozzle providing additional momentum – this can increase productivity and reduce abrasive consumption by up to 40% when compared with straight bore nozzles.

ORDERING INFORMATION

ADV - Double Venturi Nozzle. Aluminium Jacket/steel barrel/TC liner with fine thread (1.25” 11.5 TPI-NPSM)

Part no.	Description	Orifice (mm)	Lenght (mm)	Inlet (mm)
2440000	ADV-4	6,4	159	25
2441000	ADV-5	8,0	173	25
2442000	ADV-6	9,5	189	25
2443000	ADV-7	11,0	228	25
2444000	ADV-8	13.0	247	25

ADV - Double Venturi Nozzle. Aluminium Jacket/steel barrel/TC liner with large thread (2” 4.5 TPI UNC)

Part no.	Description	Orifice (mm)	Lenght (mm)	Inlet (mm)
2450000	ADV-4/50	6,4	159	25
2451000	ADV-5/50	8,0	173	25
2452000	ADV-6/50	9,5	189	25
2453000	ADV-7/50	11,0	228	25
2454000	ADV-8/50	13,0	247	25

See page 242 and 243 for technical info such as nozzle pressure, service life, air requirement/volume, etc.

ATST Tungsten Carbide Stick-up Blasting Nozzles

The ATST range comprises of Tungsten Carbide lined “stick-up” nozzles with Aluminium Jackets. “Stick-up” nozzles fit directly into the blast hose without using a nozzle holder – this allows for increased maneuverability in restricted areas such as behind re-enforcement beams. Tungsten Carbide is the liner material of choice for the majority of contractors due to long life and impact resistance - the aluminium jacket adds to the rugged character of the nozzle. The ATST series is available for use with 25 mm and 32 mm blast hose.

Airblast high velocity venturi style nozzles have been designed to maximize blast cleaning rates and provide uniform abrasive distribution. The venturi design accelerates the air / abrasive mix as it exits the nozzle providing additional momentum – this can increase productivity and reduce abrasive consumption by up to 40% when compared with straight bore nozzles.

ORDERING INFORMATION

Part no.	Description	Orifice	Lenght	Inlet
2116000	ATST–5/25 TC Stick/up Nozzle	8.0 mm	115 mm	25 mm
2117000	ATST–6/25 TC Stick/up Nozzle	10,0 mm	115 mm	25 mm
2118000	ATST–5/32 TC Stick/up Nozzle	8.0 mm	115 mm	32 mm
2118100	ATST–6/32 TC Stick/up Nozzle	10,0 mm	115 mm	32 mm
2118200	ATST–8/32 TC Stick/up Nozzle	11.0 mm	115 mm	32 mm

See page 242 and 243 for technical info such as nozzle pressure, service life, air requirement/volume, etc.

ABSN(X) Silicon Nitride Blasting Nozzles

The ABSN(X) range comprises of Silicon Nitride lined long venturi nozzles with Polyurethane Jackets. The use of the Silicon Nitride liner reduces the weight of the nozzle by approximately 50% when compared to a standard nozzles of the same size – this reduces operator fatigue. Silicon Nitride is also more durable than other nozzle liners making and operating life of over 500 hours possible. The Polyurethane Jacket cushions the liner in tough job site conditions. The molding of the polyurethane is carried out by vacuum which guarantees an accurate fit into the nozzle holder.

The ABSN nozzle has a 25 mm (1”) inlet and the ABSNX has a 32 mm (1¼”) inlet and are available with a standard large thread (/50) or fine thread.

Airblast high velocity long venturi style nozzles have been designed to maximize blast cleaning rates and provide uniform abrasive distribution. The venturi design accelerates the air / abrasive mix as it exits the nozzle providing additional momentum – this can increase productivity and reduce abrasive consumption by up to 40% when compared with straight bore nozzles.

ORDERING INFORMATION

Part no.	Description	Orifice	Lenght	Inlet
2026100	ABSN – 3/50 Silicon Nitride Nozzle with large 50 mm thread	4,8 mm	115 mm	25 mm
2026200	ABSN – 4/50 Silicon Nitride Nozzle with large 50 mm thread	6,5 mm	135 mm	25 mm
2026300	ABSNX – 5/50 Silicon Nitride Nozzle with large 50 mm thread	8 mm	150 mm	32 mm
2026400	ABSNX – 6/50 Silicon Nitride Nozzle with large 50 mm thread	9,5 mm	170 mm	32 mm
2026500	ABSNX – 7/50 Silicon Nitride Nozzle with large 50 mm thread	11 mm	205 mm	32 mm
2026700	ABSNX – 8/50 Silicon Nitride Nozzle with large 50 mm thread	13 mm	235 mm	32 mm

See page 242 and 243 for technical info such as nozzle pressure, service life, air requirement/volume, etc.

ABSCX Silicon Carbide Blasting Nozzles

The ABSC(X) range comprises of Silicon Carbide lined long venturi nozzles with Polyurethane Jackets. The use of the Silicon Carbide liner reduces the weight of the nozzle by approximately 40% when compared to a standard nozzles of the same size – this reduces operator fatigue. Silicon Carbide is also a very durable nozzle liner providing increased operating life when compared to standard nozzle liners.

The ABSC nozzle has a 25 mm (1”) inlet and the ABSCX has a 32 mm (1¼”) inlet and are available with a standard large thread (/50).

Airblast high velocity venturi style nozzles have been designed to maximize blast cleaning rates and provide uniform abrasive distribution. The venturi design accelerates the air / abrasive mix as it exits the nozzle providing additional momentum – this can increase productivity and reduce abrasive consumption by up to 40% when compared with straight bore nozzles.

ORDERING INFORMATION

Part no.	Description	Orifice	Lenght	Inlet
2048300	ABSCX – 5/50 Silicon Carbide Nozzle with large 50 mm thread	8,0 mm	145 mm	32 mm
2048400	ABSCX – 6/50 Silicon Carbide Nozzle with large 50 mm thread	9,5 mm	170 mm	32 mm
2048500	ABSCX – 7/50 Silicon Carbide Nozzle with large 50 mm thread	11,0 mm	200 mm	32 mm
2048600	ABSCX – 8/50 Silicon Carbide Nozzle with large 50 mm thread	13,0 mm	230 mm	32 mm

See page 242 and 243 for technical info such as nozzle pressure, service life, air requirement/volume, etc.

ABC(X) Boron Carbide Blasting Nozzles

The ABC(X) range comprises of Boron Carbide lined long venturi nozzles with an Aluminum Jacket. Boron Carbide is the most durable liner available – therefore these nozzles perform especially well with aggressive abrasives such as aluminum oxide, silicon carbide and steel grit, and are therefore often used in blast rooms.

The ABC(X) nozzle has a 25 mm (1”) inlet and the ABSNX has a 32 mm (1¼”) inlet and are available with a standard large thread (/50) or fine thread.

Airblast high velocity venturi style nozzles have been designed to maximize blast cleaning rates and provide uniform abrasive distribution. The venturi design accelerates the air / abrasive mix as it exits the nozzle providing additional momentum – this can increase productivity and reduce abrasive consumption by up to 40% when compared with straight bore nozzles.

ORDERING INFORMATION

Part no.	Description	Orifice	Lenght	Inlet
2121900	ABC–3 BC Nozzle with fine thread	5,0 mm	140 mm	25 mm
2122000	ABC–4 BC Nozzle with fine thread	6,0 mm	140 mm	25 mm
2122100	ABC–5 BC Nozzle with fine thread	8,0 mm	140 mm	25 mm
2122200	ABC–5 BC Nozzle with fine thread	8,0 mm	165 mm	25 mm
2122300	ABC–6 BC Nozzle with fine thread	10,0 mm	165 mm	25 mm
2122400	ABC–8 BC Nozzle with fine thread	12,0 mm	165 mm	25 mm
2122600	ABC–9 BC Nozzle with fine thread	14,0 mm	220 mm	25 mm
2307000	ABCX–3 BC Nozzle with fine thread	5,0 mm	140 mm	32 mm
2307100	ABCX–4 BC Nozzle with fine thread	6,0 mm	140 mm	32 mm
2307200	ABCX–5 BC Nozzle with fine thread	8,0 mm	140 mm	32 mm
2307300	ABCX–5 BC Nozzle with fine thread	8,0 mm	165 mm	32 mm
2307400	ABCX–6 BC Nozzle with fine thread	10,0 mm	165 mm	32 mm
2307500	ABCX–8 BC Nozzle with fine thread	12,0 mm	165 mm	32 mm
2307700	ABCX–9 BC Nozzle with fine thread	14,0 mm	220 mm	32 mm
2120600	ABC–3/50 BC Nozzle with large 50 mm thread	5,0 mm	140 mm	25 mm
2120700	ABC–4/50 BC Nozzle with large 50 mm thread	6,0 mm	140 mm	25 mm
2120800	ABC–5/50 BC Nozzle with large 50 mm thread	8,0 mm	140 mm	25 mm
2120900	ABC–5/50 BC Nozzle with large 50 mm thread	8,0 mm	165 mm	25 mm
2121000	ABC–6/50 BC Nozzle with large 50 mm thread	10,0 mm	165 mm	25 mm
2121100	ABC–8/50 BC Nozzle with large 50 mm thread	12,0 mm	165 mm	25 mm
2121300	ABC–9/50 BC Nozzle with large 50 mm thread	14,0 mm	220 mm	25 mm
2307800	ABCX – 3/50 BC Nozzle with large 50 mm thread	5,0 mm	140 mm	32 mm
2307900	ABCX – 4/50 BC Nozzle with large 50 mm thread	6,0 mm	140 mm	32 mm
2308000	ABCX – 5/50 BC Nozzle with large 50 mm thread	8,0 mm	140 mm	32 mm
2308100	ABCX – 5/50 BC Nozzle with large 50 mm thread	8,0 mm	165 mm	32 mm
2308200	ABCX – 6/50 BC Nozzle with large 50 mm thread	10,0 mm	165 mm	32 mm
2308201	ABCX - 7/50 BC Nozzle with large 50 mm thread	11,0 mm	165 mm	32 mm
2308300	ABCX – 8/50 BC Nozzle with large 50 mm thread	12,0 mm	165 mm	32 mm
2308400	ABCX – 8/50 BC Nozzle with large 50 mm thread	12,0 mm	220 mm	32 mm

See page 242 and 243 for technical info such as nozzle pressure, service life, air requirement/volume, etc.

ABCXL Boron Carbide XL Blasting Nozzles

The ABCXL range comprises of boron carbide lined extra long venturi nozzles with aluminium jacket. These high performance nozzles accelerate particles over a longer distance, achieving higher exit velocities, producing a more concentrated blast pattern and higher production rates. These nozzles are especially suitable to clean the bigger products

Boron Carbide is the most durable liner available – therefore these nozzles perform especially well with aggressive abrasives such as aluminum oxide, silicon carbide and steel grit, and are therefore often used in blast rooms.

The ABCXL is available with 1¼” (32 mm) inlet and has a standard 50 mm large thread.

ORDERING INFORMATION

ABCXL - Boron Carbide extra long (XL) venturi nozzle with aluminium jacket

Part no.	Description	Orifice	Lenght	Inlet
2304100	ABCXL-4/50 Boron Carbide XL Venturi Nozzle	6,4 mm	305 mm	32 mm
2304200	ABCXL-5/50 Boron Carbide XL Venturi Nozzle	8,0 mm	305 mm	32 mm
2304300	ABCXL-6/50 Boron Carbide XL Venturi Nozzle	9,5 mm	305 mm	32 mm
2304400	ABCXL-7/50 Boron Carbide XL Venturi Nozzle	11,1 mm	305 mm	32 mm
2304500	ABCXL-8/50 Boron Carbide XL Venturi Nozzle	12,7 mm	305 mm	32 mm
2304600	ABCXL-9/50 Boron Carbide XL Venturi Nozzle	15,1 mm	305 mm	32 mm

ABCS Boron Carbide Stick-up Blasting Nozzles

The ABCS range comprises of Boron Carbide lined "stick-up" nozzles with Aluminium Jackets. "Stick-up" nozzles fit directly into the blast hose without using a nozzle holder – this allows for increased maneuverability in restricted areas such as behind re-enforcement beams. Boron Carbide is the most durable liner available – therefore these nozzles perform especially well with aggressive abrasives such as aluminum oxide, silicon carbide and steel grit, and are therefore often used in blast rooms.

The ABCS series is available for use with 25 mm and 32 mm blast hose.

Airblast high velocity venturi style nozzles have been designed to maximize blast cleaning rates and provide uniform abrasive distribution. The venturi design accelerates the air / abrasive mix as it exits the nozzle providing additional momentum – this can increase productivity and reduce abrasive consumption by up to 40% when compared with straight bore nozzles.

ORDERING INFORMATION

Part no.	Description	Orifice	Lenght	For Hose ID
2119000	ABCS–3/25 BC Stick-up Nozzle	5.0 mm	100 mm	25 mm
2119100	ABCS–4/25 BC Stick-up Nozzle	6,0 mm	100 mm	25 mm
2119200	ABCS–5/25 BC Stick-up Nozzle	8,0 mm	100 mm	25 mm
2119300	ABCS–6/25 BC Stick-up Nozzle	10,0 mm	100 mm	25 mm
2119400	ABCS–4/32 BC Stick-up Nozzle	6,0 mm	110 mm	32 mm
2119500	ABCS–5/32 BC Stick-up Nozzle	8,0 mm	110 mm	32 mm
2119600	ABCS–6/32 BC Stick-up Nozzle	10,0 mm	110 mm	32 mm
2119601	ABCS–7/32 BC Stick-up Nozzle	11,0 mm	110 mm	32 mm
2119700	ABCS–8/32 BC Stick-up Nozzle	12.0 mm	110 mm	32 mm
2119800	ABCS–9/32 BC Stick-up Nozzle	14,0 mm	110 mm	32 mm

See page 242 and 243 for technical info such as nozzle pressure, service life, air requirement/volume, etc.

ASB Tungsten Carbide Spinnerblast Nozzles

Airblast high velocity venturi style nozzles have been designed specifically to give maximum blast cleaning rates, uniform abrasive distribution and efficiency over an extensive operating life. Through the venturi principle the air and abrasive mixture is accelerated as it exits the nozzle. Venturi nozzles increase productivity and reduce abrasive consumption with approximately 40% as compared to straight bore nozzles. Airblast offers a full selection of nozzles with different orifice diameters, sizes, and insert / jacket materials.

The orifice size of the blasting nozzle determines the cleaning rate, abrasive consumption and air consumption. When choosing a nozzle you should consider the cleaning rate required, available compressed air, size of the blast pot and the internal diameter of the piping, the blast hose and the air hose. In most blasting operations a number 5 (with 8 mm orifice) or number 6 (with 9,5 mm orifice) nozzle is used. Have a look at the consumption chart on the back of this datasheet for the compatible combinations.

ORDERING INFORMATION

Part no.	Description	Orifice	Lenght	Inlet
2107000	ASB–13 TC Spinnerblast Nozzle	6.5 mm	55 mm	13 mm
2108000	ASB–14 TC Spinnerblast Nozzle	8,0 mm	55 mm	13 mm
2109000	ASB–15 TC Spinnerblast Nozzle	8.0 mm	85 mm	13 mm
2110000	ASB–16 TC Spinnerblast Nozzle	9.5 mm	65 mm	13 mm
2111000	ASB–17 TC Spinnerblast Nozzle	9.5 mm	108 mm	13 mm

See page 242 and 243 for technical info such as nozzle pressure, service life, air requirement/volume, etc.

WIN Water Injection Blasting Nozzles

Airblast high velocity venturi style nozzles have been designed specifically to give maximum blast cleaning rates, uniform abrasive distribution and efficiency over an extensive operating life. Through the venturi principle the air and abrasive mixture is accelerated as it exits the nozzle. Venturi nozzles increase productivity and reduce abrasive consumption with approximately 40% as compared to straight bore nozzles. Airblast offers a full selection of nozzles with different orifice diameters, sizes, and insert / jacket materials.

WIN Nozzle

The WIN (Water Injection Nozzle) system is a simple, cost effective solution for high production, wet abrasive blasting that can be used with your existing pressure blast equipment. The system can be used with water from a tap or with rust inhibitors supplied through any simple pump. No special equipment is required. The WIN system offers the highest performance possible in wet abrasive blasting technology.

ORDERING INFORMATION

Part no.	Description	Orifice	Lenght	Inlet
2460000	WIN-4/50 Water Injection Nozzle with large 50 mm thread	6,4 mm	149 mm	25 mm
2461000	WIN-5/50 Water Injection Nozzle with large 50 mm thread	7,9 mm	158 mm	25 mm
2462000	WIN-6/50 Water Injection Nozzle with large 50 mm thread	9,5 mm	171 mm	25 mm
2463000	WIN-8/50 Water Injection Nozzle with large 50 mm thread	12 mm	227 mm	25 mm

See page 242 and 243 for technical info such as nozzle pressure, service life, air requirement/volume, etc.

Nozzle Orifice Gauge

The Airblast Nozzle Orifice Gauge is designed to measure the orifice size of an abrasive blasting nozzle. Proper use of this gauge can determine nozzle orifice wear that causes low nozzle pressure and decreased efficiency in the performance of the nozzle's venturi. This wear results in decreased productivity, increased abrasive consumption and improper surface profile.

A Nozzle Orifice Gauge is the best way to determine if your nozzle is still within operational limits. Always replace nozzles when they reach 1/16" wider than their original specifications as they will consume far more air and performance will be degraded. Our nozzle orifice gauge reads in mm one one side and inches on the other, showing orresponding air consumption @ 7 bar (100 PSI), and contains a marking pencil in the handle.

ORDERING INFORMATION

Part no.	Description
2000100	Nozzle Orifice Gauge 5 - 16 mm

See page 242 and 243 for technical info such as nozzle pressure, service life, air requirement/volume, etc.

AAM Angle Blasting Nozzles

The AAM range comprises of Tungsten Carbide lined angle nozzles with Aluminium Jackets. These compact nozzles blast at a 45 degree angle making them suitable for use in inaccessible or blind areas such as the reverse side of beams, flanges, bridge lattice work and inside of pipes. Tungsten Carbide is the liner material of choice for the majority of contractors due to long life and impact resistance - the Aluminium Jacket (adds to the rugged character of the nozzle).

The AAM nozzles are available with either one, two or three abrasive discharge orifices and an orifice range of 3,2 mm to 9,5 mm. The AAM nozzles come with either a fine (AAM) or large (AAM /50) thread.

Airblast high velocity venturi style nozzles have been designed to maximize blast cleaning rates and provide uniform abrasive distribution. The venturi design accelerates the air / abrasive mix as it exits the nozzle providing additional momentum – this can increase productivity and reduce abrasive consumption by up to 40% when compared with straight bore nozzles.

ORDERING INFORMATION

Part no.	Description	Orifice	Lenght	Inlet
2055000	AAM-2x1 TC Nozzle with fine 41 mm thread	1 x 3,2 mm	80 mm	20 mm
2056000	AAM-2x2 TC Nozzle with fine 41 mm thread	2 x 3,2 mm	80 mm	20 mm
2057000	AAM-2x3 TC Nozzle with fine 41 mm thread	3 x 3,2 mm	80 mm	20 mm
2058000	AAM-3x1 TC Nozzle with fine 41 mm thread	1 x 4,8 mm	80 mm	20 mm
2059000	AAM-3x2 TC Nozzle with fine 41 mm thread	2 x 4,8 mm	80 mm	20 mm
2060000	AAM-3x3 TC Nozzle with fine 41 mm thread	3 x 4,8 mm	80 mm	20 mm
2061000	AAM-4x1 TC Nozzle with fine 41 mm thread	1 x 6,5 mm	80 mm	20 mm
2062000	AAM-4x2 TC Nozzle with fine 41 mm thread	2 x 6,5 mm	80 mm	20 mm
2063000	AAM-4x3 TC Nozzle with fine 41 mm thread	3 x 6,5 mm	80 mm	20 mm
2064000	AAM-5x1 TC Nozzle with fine 41 mm thread	1 x 8,0 mm	80 mm	20 mm
2065000	AAM-5x2 TC Nozzle with fine 41 mm thread	2 x 8,0 mm	80 mm	20 mm
2066000	AAM-5x3 TC Nozzle with fine 41 mm thread	3 x 8,0 mm	80 mm	20 mm
2067000	AAM-6x1 TC Nozzle with fine 41 mm thread	1 x 9,5 mm	80 mm	20 mm
2068000	AAM-6x2 TC Nozzle with fine 41 mm thread	2 x 9,5 mm	80 mm	20 mm
2069000	AAM-6x3 TC Nozzle with fine 41 mm thread	3 x 9,5 mm	80 mm	20 mm
2070000	AAM-2x1/50 TC Nozzle with large 50 mm thread	1 x 3,2 mm	80 mm	20 mm
2071000	AAM-2x2/50 TC Nozzle with large 50 mm thread	2 x 3,2 mm	80 mm	20 mm
2072000	AAM-2x3/50 TC Nozzle with large 50 mm thread	3 x 3,2 mm	80 mm	20 mm
2073000	AAM-3x1/50 TC Nozzle with large 50 mm thread	1 x 4,8 mm	80 mm	20 mm
2074000	AAM-3x2/50 TC Nozzle with large 50 mm thread	2 x 4,8 mm	80 mm	20 mm
2075000	AAM-3x3/50 TC Nozzle with large 50 mm thread	3 x 4,8 mm	80 mm	20 mm
2076000	AAM-4x1/50 TC Nozzle with large 50 mm thread	1 x 6,5 mm	80 mm	20 mm
2077000	AAM-4x2/50 TC Nozzle with large 50 mm thread	2 x 6,5 mm	80 mm	20 mm
2078000	AAM-4x3/50 TC Nozzle with large 50 mm thread	3 x 6,5 mm	80 mm	20 mm
2079000	AAM-5x1/50 TC Nozzle with large 50 mm thread	1 x 8,0 mm	80 mm	20 mm
2080000	AAM-5x2/50 TC Nozzle with large 50 mm thread	2 x 8,0 mm	80 mm	20 mm
2081000	AAM-5x3/50 TC Nozzle with large 50 mm thread	3 x 8,0 mm	80 mm	20 mm
2082000	AAM-6x1/50 TC Nozzle with large 50 mm thread	1 x 9,5 mm	80 mm	20 mm
2083000	AAM-6x2/50 TC Nozzle with large 50 mm thread	2 x 9,5 mm	80 mm	20 mm
2084000	AAM-6x3/50 TC Nozzle with large 50 mm thread	3 x 9,5 mm	80 mm	20 mm

ABCM / ABCL / ABCLI / ANH Nozzles & Holders

Boron Carbide Flange Type/Lead-in Nozzles
Boron carbide is the hardest material after diamond and cubic boron nitride. Nozzles from boron carbide ensure the lowest wear by this superior hardness, also by use of hardest blasting materials like corundum or silicum carbide.

Airblast ABCM and ABCL flange type boron carbide straight and venturi nozzles with aluminum jacket for use in combination with ABCLI lead-in nozzles and ANH/ASNH nozzle holders.

ABCM, ABCL and ABCLI nozzles are used for injector blasting systems, compressed air blasting systems & blasting.

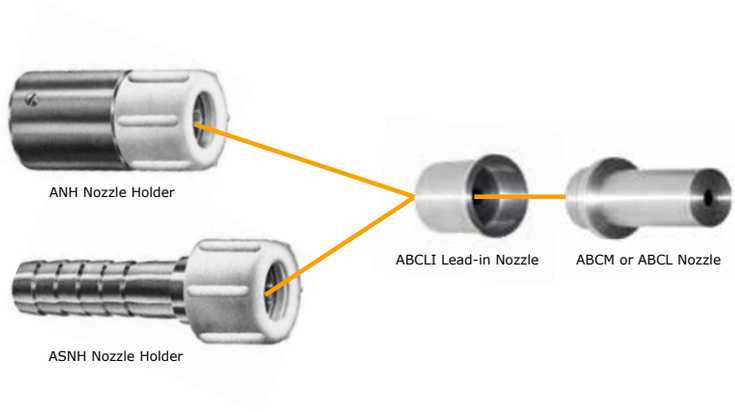

ORDERING INFORMATION

ABCM - Flange type boron carbide straight nozzle with aluminum jacket for use in combination with ABCLI lead-in nozzles and ANH/ASNH nozzle holders

Part no.	Description	Orifice (mm)	Lenght (mm)
2127200	ABCM - 4	4,0	55
2127300	ABCM - 5	5,0	55
2127400	ABCM - 6	6,0	55
2127500	ABCM - 7	7,0	86
2127600	ABCM - 8	8,0	86
2127700	ABCM - 9	9,0	86
2127800	ABCM - 10	10,0	86
2127900	ABCM - 11	11,0	86
2128000	ABCM - 12	12,0	86
2128100	ABCM - 13	13,0	86
2128200	ABCM - 14	14,0	86

ABCM - Lead-in nozzles for use in combination with ABCM and ABCLI nozzles and AHN nozzle holder

Part no.	Description	Orifice (mm)	Lenght (mm)
2129200	ABCLI - 6	6,0	40
2129300	ABCLI - 7	7,0	40
2129400	ABCLI - 8	8,0	40
2129500	ABCLI - 9	9,0	40
2129600	ABCLI - 10	10,0	40
2129700	ABCLI - 11	11,0	40
2129800	ABCLI - 12	12,0	40
2129900	ABCLI - 13	13,0	40
2130000	ABCLI - 14	14,0	40

ABCL - Long lenght flange type boron carbide venturi nozzle with aluminum jacket for use in combination with ABCLI lead-in nozzles and ANH/ASNH nozzle holders

Part no.	Description	Orifice (mm)	Lenght (mm)
2123400	ABCL - 6	6,0	100
2123500	ABCL - 7	7,0	100
2128400	ABCL - 8	8,0	100
2128500	ABCL - 9	9,0	100
2128600	ABCL - 10	10,0	100
2128700	ABCL - 11	11,0	100
2128800	ABCL - 12	12,0	100
2128900	ABCL - 13	13,0	100
2129000	ABCL - 14	14,0	100
2129100	ABCL - 15	15,0	100

ANH/ASNH - Aluminum nozzle holders with plastic tightening nut for use in combination with ABCM flange type nozzles and ABCLI lead-in nozzles.

Part no.	Description
2137100	ANH - 39 for 39 mm hose OD
2138100	ANH - 48 for 48 mm hose OD
2137200	ASNH - 25 for 25 mm hose ID
2138200	ASNH - 32 for 32 mm hose ID

ABCFT/ABCA/ABCC/ABCR Nozzles

ORDERING INFORMATION

ABCFT - Flange type boron carbide fishtail nozzle for use in combination with ABCLI lead-in nozzles and ANH/ASNH nozzle holders

Part no.	Description	Orifice (mm)	Lenght (mm)
2130200	ABCFT - 10/4	10 x 4	72
2130300	ABCFT - 15/5	15 x 5	72
2130400	ABCFT - 16/8	16 x 8	82

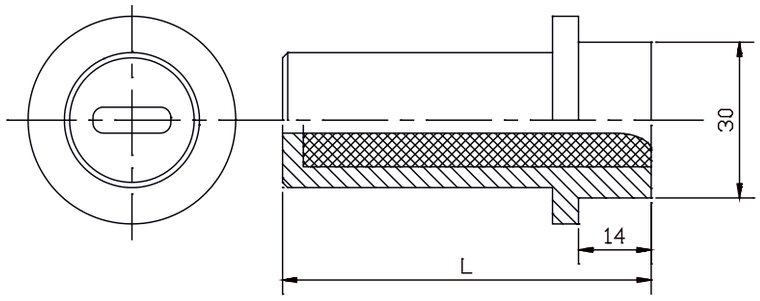

ABCA - Flange type boron carbide angle nozzle for use in combination with ABCLI lead-in nozzles and ANH/ASNH nozzle holders

Part no.	Description	Orifice (mm)	Lenght (mm)	Angle (°)
2130700	ABCA - 20/8	8	100	20
2130800	ABCA - 20/10	10	100	20
2130900	ABCA - 20/12	12	100	20
2131000	ABCA - 25/8	8	100	25
2131100	ABCA - 25/10	10	100	25
2131200	ABCA - 25/12	12	100	25
2131300	ABCA - 30/8	8	105	30
2131400	ABCA - 30/10	10	105	30
2131500	ABCA - 30/12	12	105	30
2131600	ABCA - 40/8	8	115	40
2131700	ABCA - 40/10	10	115	40
2131800	ABCA - 40/12	12	115	40

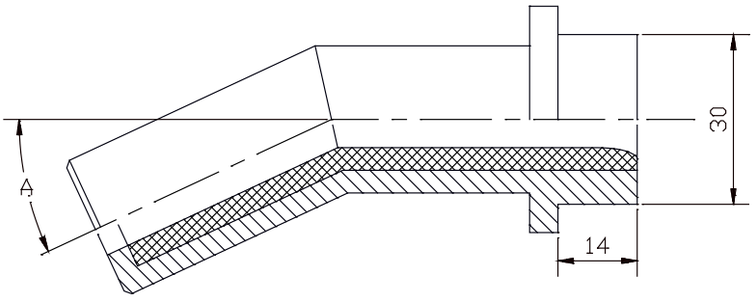

ABCC - Curved nozzle with fine 26 mm thread (¾")

Part no.	Description	Orifice (mm)	Lenght (mm)	Angle (°)
2131900	ABCC - 40/6	6,0	125	40
2132100	ABCC - 40/8	8,0	125	40
2132200	ABCC - 40/10	10,0	125	40

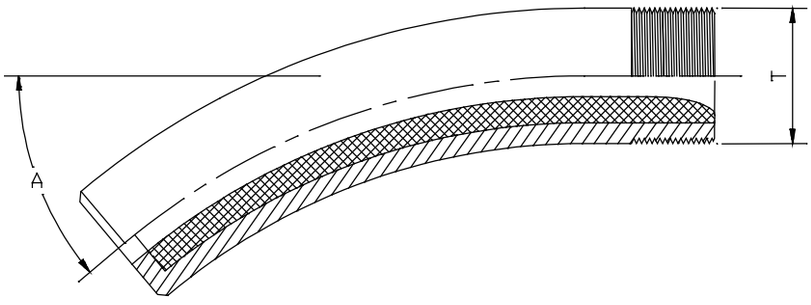

ABCR - Boron carbide blast head 360° with metal jacket and replaceable deflection piece

Part no.	Descrip-tion	Thread (T")	Diameter (mm)	Lenght (mm)
2309000	ABCR - 38	3/8	22	61
2309100	ABCR - 24	1/2	23	61
2309200	ABCR - 34	3/4	30	73
2309300	ABCR - 44	1 1/4	38	73
2309400	ABCR - 54	1 1/4	47	78
2309500	ABCA - 64	1 1/2	53	78
2309600	Deflection piece for ABCR-38			
2309700	Deflection piece for ABCR-24			
2309800	Deflection piece for ABCR-34			
2309900	Deflection piece for ABCR-44			
2310000	Deflection piece for ABCR-54			

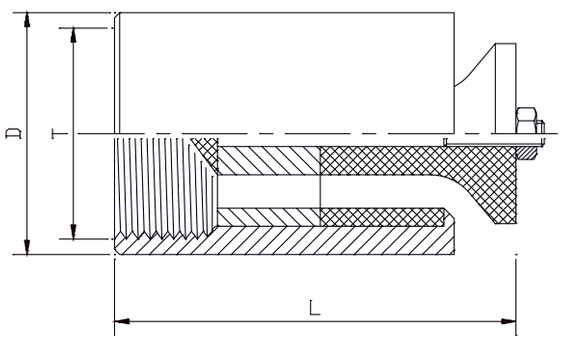

NNH/CHE Nozzle Holders Nylon & Aluminium

The Airblast nozzle holders are available in nylon and aluminium.

All nozzle holders are manufactured to fit externally over the blast hose. Internal grip rings bite into the blast hose for a safe and secure fit and retaining screws provide additional holding power without penetrating the inner hose layer.

Airblast offers a full selection of nozzle holders with fine or large thread. Contact Airblast to discuss which holder is most suitable for your specific application.

ORDERING INFORMATION

Part no.	Description
	NYLON WITH FINE 41MM THREAD
2123100	NNH-0 Fits to 27 mm O.D. - 13 mm I.D. hose (½") - ¾" thread
2123600	NNH-¾ Fits to 33 mm O.D. - 19 mm I.D. hose (¾")
2124100	NNH-1 Fits to 39 mm O.D. - 25 mm I.D. hose (1")
2125100	NNH-2 Fits to 48 mm O.D. - 32 mm I.D. hose (1¼")
2126100	NNH-3 Fits to 56 mm O.D. - 38 mm I.D. hose (1½")
	NYLON WITH LARGE 50MM THREAD
2123000	NNH-0/50 Fits to 27 mm O.D. - 13 mm I.D. hose (½") - ¾" thread
2123500	NNH-¾/50 Fits to 33 mm O.D. - 19 mm I.D. hose (¾")
2124000	NNH-1/50 Fits to 39 mm O.D. - 25 mm I.D. hose (1")
2125000	NNH-2/50 Fits to 48 mm O.D. - 32 mm I.D. hose (1¼")
2126000	NNH-3/50 Fits to 56 mm O.D. - 38 mm I.D. hose (1½")
	ALUMINIUM WITH FINE 41MM THREAD
2133100	CHE-0 Fits to 27 mm O.D. - 13 mm I.D. hose (½") - ¾" thread incl. adaptor
2133200	CHE-¾ Fits to 33 mm O.D. - 19 mm I.D. hose (¾")
2134000	CHE-1 Fits to 39 mm O.D. - 25 mm I.D. hose (1")
2135000	CHE-2 Fits to 48 mm O.D. - 32 mm I.D. hose (1¼")
	ALUMINIUM WITH LARGE 50MM THREAD
2137000	CHE-1/50 Fits to 39 mm O.D. - 25 mm I.D. hose (1")
2138000	CHE-2/50 Fits to 48 mm O.D. - 32 mm I.D. hose (1¼")

Nozzle washers and screws

Part no.	Description
2140000	AW-0 For nozzles with ½" inlet, ¾" thread nozzle holders
2141000	AW-25 For nozzles with 1" inlet, 1¼" fine thread nozzle holders
2141100	AW-25/N For nozzles with 1" inlet, 2" large thread nylon nozzle holders
2142000	AW-32 For nozzles with 1¼" inlet, 2" large thread aluminium nozzle holders
2142100	AW-32/N For nozzles with 1¼" inlet, 2" large thread nylon nozzle holders
2166000	KS-0 Screw for ½" ID hoses
2167000	KS Screw for hoses larger than ½" ID

Cast Iron Air Hose Couplings and Clamps

The Airblast range of cast iron air hose couplings and clamps gives you the optimum combination of durability, cost and safety. Description SKG Bajonet Coupling, KAG Male Coupling and KIG Female Coupling:

- Double locking
- Distance between lugs 42 mm
- Oil-resistant rubber gasket
- Working pressure 10 bar - 142 psi

ORDERING INFORMATION

Part no.	SKG Cast Iron Hose Coupling with hose barb - DIN 3483/3489	Fits to hose ID	
		mm	inches
2168000	SKG-6 Quick coupling with hose barb	6	¼"
2168100	SKG-10 Quick coupling with hose barb	10	⅜"
2168200	SKG-13 Quick coupling with hose barb	13	½"
2168300	SKG-15 Quick coupling with hose barb	15	⅝"
2168400	SKG-19 Quick coupling with hose barb	19	¾"
2168500	SKG-25 Quick coupling with hose barb	25	1"
2168600	SKG-32 Quick coupling with hose barb	32	1¼"

Part no.	KIG Cast Iron Hose Coupling with inside thread - DIN 3481/3489
2169000	KIG-14 Quick coupling with ¼" inside thread
2169100	KIG-38 Quick coupling with ⅜" inside thread
2169200	KIG-12 Quick coupling with ½" inside thread
2169300	KIG-34 Quick coupling with ¾" inside thread
2169400	KIG-10 Quick coupling with 1" inside thread
2169600	KIG-54 Quick coupling with 1¼" inside thread

Part no.	KAG Cast Iron Hose Coupling with outside thread - DIN 3481/3489
2170000	KAG-14 Quick coupling with ¼" outside thread
2170100	KAG-38 Quick coupling with ⅜" outside thread
2170200	KAG-12 Quick coupling with ½" outside thread
2170300	KAG-34 Quick coupling with ¾" outside thread
2170400	KAG-10 Quick coupling with 1" outside thread
2170500	KAG-54 Quick coupling with 1¼" outside thread

Part no.	SL Cast Iron Hose Clamp DIN 20039 A	Fits to hose	
		OD	ID
2171000	SL-29 Hose clamp	22 - 29 mm	½" ¼"
2171100	SL-34 Hose clamp	28 - 34 mm	¾" ⅜"
2171200	SL-40 Hose clamp	32 - 40 mm	1"
2171300	SL-49 Hose clamp	39 - 49 mm	1¼"
2171400	SL-60 Hose clamp	48 - 60 mm	1½"
2171500	SL-76 Hose clamp	60 - 76 mm	2"
2171600	SL-94 Hose clamp	77 - 94 mm	2½"
2171700	SL-115 Hose clamp	94 - 115 mm	3
2171800	SL-145 Hose clamp	115 - 145 mm	3½"

Part no.	Description
2164000	Rubber gasket for SKG, KIG and KAG couplings

Nylon/Cast Iron Couplings

Nylon and Cast Iron Couplings for blast hose and machines
The Airblast range of cast iron and nylon blast hose and machine couplings gives you the optimum combination of durability, cost and safety.

Cast Iron Hose and Machine Couplings:
- Zinc-plated, modular
- Graphit cast iron
- Gasket in Perbunan

Nylon Hose and Machine Couplings:
The lightweight super-strong Airblast Nylon Hose and Machine Couplings are made out of the finest quality of nylon material which allows it in strength, durability and weight an advantage over brass. The universal quarter turn design makes it possible to couple different size hoses and couplings made of different material. Airblast Nylon Hose and Machine Couplings are manufactured within the narrowest of tolerances assuring a perfect match all the time.

ORDERING INFORMATION

Cast Iron Hose / Machine Couplings

Part no.	Description	Fits to hose		
		OD mm	ID	
			mm	inches
2147000	CQT-1 Cast iron hose coupling	39	25	1"
2148000	CQT-2 Cast iron hose coupling	48	32	1¼"
2149000	CQT-3 Cast iron hose coupling	56	38	1½"
2150000	CQT-4 Cast iron hose coupling	60	42	1¾"
2163000	CFT Cast Iron machine coupling with 1¼" female thread			

Nylon Hose / Machine Couplings

Part no.	Description	Fits to hose		
		OD mm	ID	
			mm	inches
2150900	CQN-¾ Nylon hose coupling	33	19	¾"
2151000	CQN-1 Nylon hose coupling	39	25	1"
2152000	CQN-2 Nylon hose coupling	48	32	1¼"
2153000	CQN-3 Nylon hose coupling	56	38	1½"
2154000	CQN-4 Nylon hose coupling	60	42	1¾"
2163100	CFN Nylon machine coupling with 1¼" female thread			
2154100	Safety spring for CQN couplings			

Gaskets

Part no.	Description
2165000	CQG Gasket for CQT and CFT couplings
2165100	CQG-1 Gasket for CQN-¾ and 1
2165200	CQG-2 Gasket for CQN-2, -3, -4 and CFN coupling

Screws

Part no.	Description
2166000	KS-0 Screw for ½" ID hoses
2167000	KS Screw for hoses larger than ½" ID

Quick Connect Couplings (brass)

Brass - MS 58 DN 7,2 for air
The Airblast range of brass quick connect couplings gives you the optimum combination of durability, cost and safety.

Description Hose Coupling, Female Coupling, Male coupling:
- Single shut-off
- Euro standard
- Working pressure 35 bar - 500 psi

Description Plug Nipples with Female Thread, Plug Nipples with Male Thread and Plug Nipples with Hose Stem for air
- Euro standard
- Working pressure 35 bar - 500 psi

Airblast offers a full selection of air couplings as well as other couplings used in blast cleaning and paint spraying operation – contact Airblast to discuss which coupling is most suitable for your specific application.

ORDERING INFORMATION

Quick Connect Coupling with outside thread - brass

Part no.	Description
2174100	CCC-14/O Quick coupling with ¼” outside thread
2174200	CCC-38/O Quick coupling with ⅜” outside thread
2174300	CCC-12/O Quick coupling with ½” outside thread

Quick Connect Coupling with inside thread - brass

Part no.	Description
2175100	CCC-14/I Quick coupling with ¼” inside thread
2175200	CCC-38/I Quick coupling with ⅜” inside thread
2175300	CCC-12/I Quick coupling with ½” inside thread

Quick Connect Coupling with hose barb - brass

Part no.	Description
2176000	CCC-14/F Quick coupling with hose barb (6 mm)
2176100	CCC-38/F Quick coupling with hose barb (9 mm)
2176200	CCC-12/F Quick coupling with hose barb (13 mm)

Quick Connect Plug with outside thread - brass

Part no.	Description
2177000	OF-18 Quick connect plug with ⅛” outside thread
2177100	OF-14 Quick connect plug with ¼” outside thread
2177200	OF-38 Quick connect plug with ⅜” outside thread
2177300	OF-12 Quick connect plug with ½” outside thread

Quick Connect Plug with inside thread - brass

Part no.	Description
2178000	IF-18 Quick connect plug with ⅛” inside thread
2178100	IF-14 Quick connect plug with ¼” inside thread
2178200	IF-38 Quick connect plug with ⅜” inside thread
2178300	IF-12 Quick connect plug with ½” inside thread

Manifolds with Quick Connect Coupling - brass

Part no.	Description
2180000	M-2 Manifold for 2 users (⅜” with inside thread)
2180100	M-3 Manifold for 3 users (⅜” with inside thread)

Quick Connect Plug hose barb - brass

Part no.	Description
2179000	F-14 Quick connect plug with hose barb (6 mm)
2179100	F-38 Quick connect plug with hose barb (9 mm)
2179200	F-12 Quick connect plug with hose barb (13 mm)

Camlock Couplings (aluminium)

Camlock couplings are well-known as quick hose coupling providing quick connection and disconnection for pumps, tanks, equipment and places where hoses should be changed frequently.

Aluminium cam lock couplings allow you to quickly connect and disconnect your hose in a variety of applications, including dry product transportation where hoses should be changed frequently.

Aluminium cam lock couplings can be used with PVC suction hoses, layflat discharge hoses and other low pressure hoses. It highly simplify the operation and cut down working time. However, cam locks are not suitable for any kind of hose. It is forbidden to be used in compressed air or gas or high pressure applications.

T6-heat-treatment, in order to increase the mechanical properties.

ORDERING INFORMATION

Female coupler with hose tail				**Male adapter hose tail**		
Part no.	**Size**	**Max. WP**		**Part no.**	**Size**	**Max. WP**
2304000	2”	16 bar		2304027	2”	16 bar
2304010	2½”	10 bar		2304028	2½”	10 bar
2304011	3”	8 bar		2304029	3”	8 bar
2304012	4”	7 bar		2304030	4”	7 bar
2304013	5”	5 bar		2304031	5”	5 bar
2304014	6”	5 bar		2304032	6”	5 bar

Female coupler male thread				**Male adapter male thread**		
2304015	2”	16 bar		2304033	2”	16 bar
2304016	2½”	10 bar		2304034	2½”	10 bar
2304017	3”	8 bar		2304035	3”	8 bar
2304018	4”	7 bar		2304036	4”	7 bar
2304019	5”	5 bar		2304037	5”	5 bar
2304020	6”	5 bar		2304038	6”	5 bar

Female coupler female thread				**Male adapter female thread**		
2304021	2”	16 bar		2304039	2”	16 bar
2304022	2½”	10 bar		2304040	2½”	10 bar
2304023	3”	8 bar		2304041	3”	8 bar
2304024	4”	7 bar		2304042	4”	7 bar
2304025	5”	5 bar		2304043	5”	5 bar
2304026	6”	5 bar		2304044	6”	5 bar

Blast Hose

The Airblast Blast Hose range is comprised of the highest quality hose manufactured in the most popular diameters and available in two executions. All Airblast Blast Hoses features an antistatic outer case and a lightweight internal knitted nylon ply – this gives the optimum combination of durability, cost and safety.

Executions
Heavy execution: Most popular blast hose with excellent tube quality making it suitable for use with all abrasives.
Extra heavy execution: Premium quality blast hose especially suitable for use with sharp edged hard abrasives.

Features
- Long service life due to wear resistant inner tube
- Antistatic construction prevents the build-up of static electricity

Specifications

Cover	: SBR, black, antistatic, cloth impression
Reinforcement	: Textile wrapped
Tube	: NR/SBR/BR, black, smooth, antistatic, abrasion resistant
Working pressure	: 12 bar
Safety Factor	: 3.5 : 1
Temperature range	: -35°C. / +80°C.
Wear factor	: Heavy Execution = 50 mm³, Extra Heavy Execution = 36 mm³ (according to DIN ISO 4649:2006)
Standards	: Exceeds EN ISO 3861:2008.

ORDERING INFORMATION

Blast Hose - Heavy Execution

Part no.	Description	ID		OD in mm	Wall width in mm	Weight approx. kg./mtr.	Available lenghts in mtr.
		mm	inches				
2506000	Blast Hose 13 x 7	13	½"	27	7	0,50	5 / 10 / 20 / 40
2506100	Blast Hose 19 x 7	19	¾"	33	7	0,65	20 / 40
2507000	Blast Hose 25 x 7	25	1"	39	7	0,75	20 / 40
2508000	Blast Hose 32 x 8	32	1¼"	48	8	1,10	20 / 40
2509000	Blast Hose 38 x 9	38	1½"	56	9	1,45	40
2510000	Blast Hose 42 x 9	42	1¾"	60	9	1,65	40
2511000	Blast Hose 50 x 11	50	2"	72	11	2,20	40

Blast Hose - Extra Heavy Execution

Part no.	Description	ID		OD in mm	Wall width in mm	Weight approx. kg./mtr.	Available lenghts in mtr.
		mm	inches				
2512000	Blast Hose 13 x 7	13	½"	27	7	0,50	5 / 10 / 20 / 40
2502100	Blast Hose 19 x 7	19	¾"	33	7	0,65	20 / 40
2513000	Blast Hose 25 x 7	25	1"	39	7	0,80	20 / 40
2514000	Blast Hose 32 x 8	32	1¼"	48	8	1,10	20 / 40
2515000	Blast Hose 38 x 9	38	1½"	56	9	1,50	40

Accessories

Part no.	Description
5033000	PRG Nozzle pressure gauge kit. Hypodermic needle gauge incl. 5 needles
5033100	PRG-N Needles for gauge (5 pcs.)
2517500	Whip check hose safety cable for hoses ½" - 1¼"
2517501	Whip check hose safety cable for hoses 1½" - 3"

Polyurethane Suction / Discharge Hose

This range of hose can be used to move new abrasive or discharge spent abrasive. The hose is flexible and kink proof as well as abbrasion resistant. When bent the hose stays full bore as the PU material is forced to the outside, creating a ful flow without obstruction.

Airblast range of Suction and Discharge Hoses comprises of the highest quality hoses manufactured and gives you the optimum combination of durability, cost and safety.

Specifications

Norm : EU 10/2011 Cat. E
Temperature range : -25°C / +85°C
Tube : Transparent Polyurethane smooth inside crushproof PVC spiral, corrugated cover
Bending radius : 1 x inside diameter

ORDERING INFORMATION

Polyurethane Suction/Discharge Hoses

Part no.	Description	ID in mm	OD in mm	Vacuum bar	PU-wall in mm	Available lenghts in mtr.
2518300	Suction/Discharge Hose 51 x 59	51	59	0,3	0,7	20
2518400	Suction/Discharge Hose 63 x 71	63	71	0,3	0,7	20
2518500	Suction/Discharge Hose 76 x 85	76	85	0,3	0,7	20
2518600	Suction/Discharge Hose 102 x 112	102	112	0,3	0,8	20
2518700	Suction/Discharge Hose 127 x 139	127	139	0,3	0,8	20
2518800	Suction/Discharge Hose 152 x 165	152	165	0,2	0,8	20

Clamps

Super Hose Clamps

One bolt clamp, steel with finished side to protect hose.
Zinc plated, chrome and passivated, steel bold and nut.

Part no.	Range size	Band width imm	Band thickness mm
2180020	64 / 67	22	1,2
2180021	74 / 79	24	1,5
2180022	86 / 91	24	1,5
2180023	113 / 121	24	1,5
2180024	140 / 148	26	1,7
2180025	162 / 174	26	1,7

Other clamps and sizes are available on request.

Rubber Suction & Discharge Hose

Airblast range of Suction and Discharge Hoses comprises of the highest quality hoses manufactured and gives you the optimum combination of durability, cost and safety.

Rubber Hose Suction hose for shotblast, pebbles, mud, sand etc. Also for suction/discharge of other abrasives. High abrasive resistant tube. Light and flexible construction.

Specifications:

Working pressure	:	1 bar
Burst pressure	:	2,5 bar
Vacuum	:	0,9 bar
Temperature range	:	-25°C / +70°C
Wear resistance	:	75 mm³ according to DIN 53516
Tube	:	NR/SBR, smooth
Cover	:	SBR, black, corrugated, fabric finish
Reinforcements	:	textile plies, static-wire steel spiral
Bending radius	:	2.5 x inside diameter

ORDERING INFORMATION

Rubber Suction/Discharge Hoses

Part no.	Description	ID in mm	OD in mm	Wall width in mm	Available lenghts in mtr.
8069717	Suction/Discharge Hose 51 x 60	51	60	4,5	20
8069708	Suction/Discharge Hose 63 x 72	63	72	4,5	20
8069718	Suction/Discharge Hose 76 x 85	76	85	4,5	20
8069709	Suction/Discharge Hose 102 x 112	102	112	5	20
8069719	Suction/Discharge Hose 127 x 137	127	137	5	20
8069710	Suction/Discharge Hose 152 x 164	152	164	6	20

Couplings

Female coupling for hoseclamp assembly, System "Perrot".
Hot dip galvanized steel with handle. SBR seal.
Handle with all sizes fixed except 8" will be seperated and interchangable.

Male coupling for hose-clamp assembly, System "Bauer".
Hot dip galvanized steel. With hose tail, ball and lever closure ring.

Part no.	Size	For hose inner Ø mm	Part no.	Size	For hose inner Ø mm
2180001	50 / 50	51	2180010	50 / 50	51
2180002	89 / 75	76	2180011	89 / 75	76
2180003	108 / 100	102	2180012	108 / 100	102
2180004	133 / 125	125	2180013	133 / 125	125
2180005	159 / 150	152	2180014	159 / 150	152

For hose clamps see page 62.

Rubber Suction & Discharge Hose - heavy duty

Airblast heavy duty Rubber Suction and Discharge Hoses comprises of the highest quality hoses manufactured and gives you the optimum combination of durability, cost and safety.

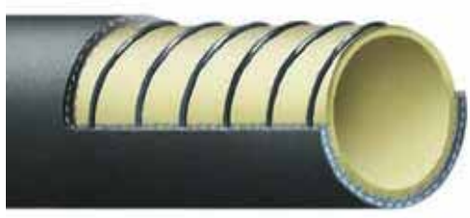

This ultra heavy duty hose can be used to move new abrasive or discharge spent abrasive.

Specifications:

Working pressure	:	4 bar
Burst pressure	:	12 bar
Vacuum	:	0,8 bar
Temperature range	:	-30°C / +80°C
Tube	:	High abrasive PARA rubber, brown, smooth,
Cover	:	SBR/NR black smooth fabric finish
Reinforcements	:	textile plies, steel wire helix static wire
Bending radius	:	2.5 x inside diameter

ORDERING INFORMATION

Rubber Suction/Discharge Hoses - heavy duty

Part no.	Description	ID in mm	OD in mm	Wall width in mm	Available lenghts in mtr.
2518000	Suction/Discharge Hose 51 x 64 - 2”	51	64	6,5	40
2518100	Suction/Discharge Hose 63 x 76 - 2½”	63	76	6,5	40
2518200	Suction/Discharge Hose 76 x 91 - 3”	76	91	7,5	40
2519000	Suction/Discharge Hose 102 x 118 - 4”	102	118	8	20
2519100	Suction/Discharge Hose 125 x 141 - 5”	125	141	8	20
2519200	Suction/Discharge Hose 152 x 173 - 6”	152	173	10,5	20

Couplings

Female coupling for hoseclamp assembly, System “Perrot”.
Hot dip galvanized steel with handle. SBR seal.
Handle with all sizes fixed except 8” will be seperated and interchangable.

Male coupling for hose-clamp assembly, System “Bauer”.
Hot dip galvanized steel. With hose tail, ball and lever closure ring.

Part no.	Size	For hose inner Ø mm	Part no.	Size	For hose inner Ø mm
2180001	50 / 50	51	2180010	50 / 50	51
2180002	89 / 75	76	2180011	89 / 75	76
2180003	108 / 100	102	2180012	108 / 100	102
2180004	133 / 125	125	2180013	133 / 125	125
2180005	159 / 150	152	2180014	159 / 150	152

For hose clamps see page 62.

Air Pressure Hose

The Airblast Air Hose range comprises of the highest quality hoses manufactured and gives you the optimum combination of durability, cost and safety.

Specifications

Norm : DIN 20018
Working pressure : 10 bar Air / 16 bar water
Burst pressure : ¼" - 1": 54 bar, 1¼" - 2": 40 bar
Temperature range : -30°C / +50°C
Tube : SBR, black, smooth,
Cover : SBR, black fabric finish, UV-and ageing resistant

ORDERING INFORMATION

Part no.	Description	ID		OD in mm	Wall width in mm	Available lenghts in mtr.
		mm	inches			
2520000	Air Hose 6 x 13	6	¼"	13	3,5	40 / 100
2521000	Air Hose 10 x 19	10	⅜"	19	4,5	40
2521100	Air Hose 13 x 23	13	½"	23	6	40 / 50
2522000	Air Hose 19 x 31	19	¾"	31	6	20 / 40 / 50
2523000	Air Hose 25 x 39	25	1"	39	7	40
2524000	Air Hose 32 x 48	32	1¼"	48	8	40
2525000	Air Hose 38 x 50	38	1½"	50	6	40
2526000	Air Hose 51 x 65	51	2"	66	7	40

For cast iron air hose couplings and clamps see page 57.

Whip Check (hose safety cable)

Part no.	Description
2517500	Whip check for hoses ½" - 1¼"
2517501	Whip check for hoses 1½" - 3"

High Pressure Paint Spray Hose

A high pressure, high performance, airless paintspray hose specially designed to meet the exacting requirements of the industry. Steel braid reinforcing insures strength and guarantees electrical conductivity.

This hose offers optimum resistance to a wide range of fluids including paints, chlorinated solvents and other chemicals.

The hoses are fully compatible with Airblast's range of airless and air-assisted paintspray pumps and with most other common makes of paintspray equipment.

Airblast Paint Spray Hoses comprises of the highest quality hoses manufactured and gives you the optimum combination of durability, cost and safety.

Specifications

Core	:	Nylon (PA)
Pressure support	:	1 or 2 Braids of Brass Coated High Tensile Steel Wire
Cover	:	Polyurethane (PUR)
Working temp.	:	-40° C to +95° C
Colour	:	Blue

ORDERING INFORMATION

Paintspray Hose

Part no.	Description
	Paintspray hose, 1-wire, ¼" ID coupled with: ¼" NPSM swivel female at both ends. Working Pressure: 400 bar. Burst Pressure: 1300 bar.
7702000	Paintspray hose ¼" x 10 mtrs. 1-wire
7702500	Paintspray hose ¼" x 15 mtrs. 1-wire
7703000	Paintspray hose ¼" x 20 mtrs. 1-wire
7704000	Paintspray hose ¼" x 30 mtrs. 1-wire
	Paintspray hose, 2-wire, ¼" ID coupled with: ¼" NPSM swivel female at both ends. Working Pressure: 483 bar. Burst Pressure: 1930 bar.
7707000	Paintspray hose ¼" x 10 mtrs. 2-wire
7707500	Paintspray hose ¼" x 15 mtrs. 2-wire
7708000	Paintspray hose ¼" x 20 mtrs. 2-wire
7709000	Paintspray hose ¼" x 30 mtrs. 2-wire
	Paintspray hose, 1-wire, 3/8" ID coupled with: ⅜" NPSM swivel female at both ends. Working Pressure: 300 bar. Burst Pressure: 1000 bar.
7712000	Paintspray hose ⅜" x 10 mtrs. 1-wire
7712500	Paintspray hose ⅜" x 15 mtrs. 1-wire
7713000	Paintspray hose ⅜" x 20 mtrs. 1-wire
7714000	Paintspray hose ⅜" x 30 mtrs. 1-wire
	Paintspray hose, 2-wire, 3/8" ID coupled with: ⅜" NPSM swivel female at both ends. Working Pressure: 450 bar. Burst Pressure: 1380 bar.
7717000	Paintspray hose ⅜" x 10 mtrs. 2-wire
7717500	Paintspray hose ⅜" x 15 mtrs. 2-wire
7718000	Paintspray hose ⅜" x 20 mtrs. 2-wire
7719000	Paintspray hose ⅜" x 30mtrs. 2-wire

Notes

Pipe Blasting & Coating

Product	Page
Miniblast	70
Circleblast internal pipe blaster	71
Spinnerblast internal pipe blaster	73
Jumbo internal pipe blaster	75
Pipecoater-I internal pipe coater	77
Pipecoater-II internal pipe coater	79
Pipecoater-III/125 internal pipe coater (new model)	81
Pipecoater-III/125 internal pipe coater (old model)	83
Pipecoater-III/300 internal pipe coater	84
Pipecoater-III/900 internal pipe coater	86
Pipecoater-IV internal pipe coater	88
Semi-automatic winch system	90

Mini Blast Internal Pipe Cleaner

The Mini Blast Internal Pipe Cleaner is designed to blast clean pipe ranging in size from ½" to 1¼" (13 - 32 mm) I.D. The tool connects to an abrasive blast machine in place of a standard nozzle. In operation, the Mini Blast nozzle directs the air/abrasive mixture at a deflection tip. This tip causes the blast pattern to fan out into a wide, circular pattern, which cleans the inside of the pipe as the tool is passed through. Two adaptors are available to connect the tool to the nozzle holder.

The Mini Blast tool is made from the finest materials available. However, some of its internal wear parts are of necessity rather brittle, due to their extreme hardness. The tool should therefore be handled carefully to avoid dropping it or giving it a sharp blow.

MB Mini Blast Internal Pipe Cleaner - Assemblies	
Part no.	**Description**
3000100	MB-1 Mini Blast - 250 mm, incl. AMB-4
3000200	MB-2 Mini Blast - 500 mm, incl. AMB-4
3000300	MB-3 Mini Blast - 750 mm, incl. AMB-4
3000400	MB-4 Mini Blast - 1000 mm, incl. AMB-4

MB Mini Blast Internal Pipe Cleaner - Parts List		
Item	**Part no.**	**Description**
01	3000500	Mini Blast Head TC Ø 13 mm
02	3000600	AMB-4 Adaptor M10 - fine 26 mm thread
03	3000700	EMB-250 Extension pipe 250 mm long
	3000800	EMB-500 Extension pipe 500 mm long
	3000900	EMB-750 Extension pipe 750 mm long
	3001200	EMB-1000 Extension pipe 1000 mm long
04	3001100	AMB-6 Adaptor M10 - large 50 mm thread

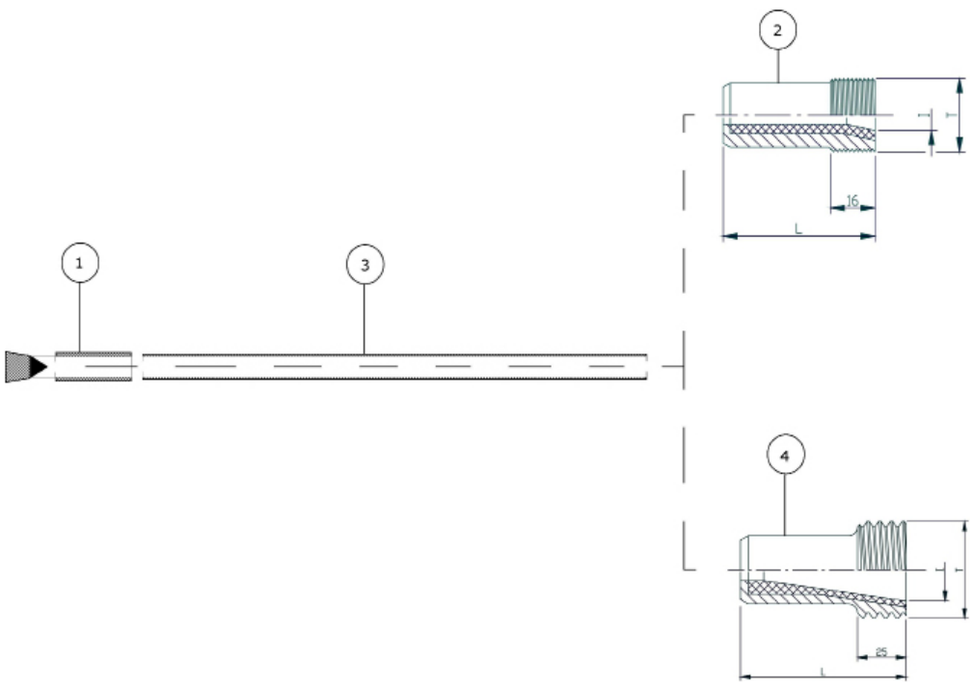

Circleblast Internal Pipe Blaster

The Circleblast Internal Pipe Blasters are designed to blast clean pipes ranging in size from 1¼" to 12" (32 to 305 mm) I.D. The tool connects to an abrasive blast machine in place of a standard nozzle. In operation, the Circleblast nozzle directs the air/abrasive mixture at a deflection tip. This tip causes the blast pattern to fan out into a wide, circular pattern, which cleans the inside of the pipe as the tool is passed through. Two centering devices are available to hold the tool in position during passes in different diameter pipe.

Features and benefits

- Constant cleaning of internal surface
- Cleaning with the highest speed possible
- Saving on time and abrasives
- Adjustable setup for the best cleaning speed
- Easy handling and no down-time
- Blast in only one drive through
- Adjustable for all kind of abrasive
- Very rigged construction

PIPEDIAMETER in (mm)	TOOL	TOOL RANGE in (mm)	CENTERING DEVICE	REQUIRED NOZZLE	AIR CONSUMPTION (cfm)	AIR CONSUMPTION (m³/min)
1¼" – 3" (32 – 76 mm)	CB-0	1 1/4" – 3" (32 - 76 mm)	-	-	400	11.3
3" – 12" (76 – 305 mm)	CB-1 CB-2	3"- 5" (76 - 127 mm)	CBC-1	AHBN-8 AHBN-10	225 400	6.4 11.3
	CB-1 CB-2	5"- 12" (127 - 305 mm)	CBC-2	AHBN-8 AHBN-10	225 400	6.4 11.3

ORDERING INFORMATION

CB Circleblast Assemblies

Part no.	Description
3002100	CB-0 Circleblast for direct mounting on blast hose with ½" I.D. (13x7mm) for pipes 1¼" to 3" (35-76mm) I.D. TC deflection tip
3002200	CB-1 Circleblast complete with:½" nozzle HBN-8, CBC-1 centering collars, CBC-2 adjustable centering carriage.
3002300	CB-2 Circleblast complete with: 5/8" nozzle HBN-10, CBC-1 centering collars, CBC-2 adjustable centering carriage.

CB-0 Parts List

Item	Part no.	Description
01	3002500	Housing
02	3002600	Bolt
03	3016000 3016001	CB-110/1 Deflection tip TC CB-110/1 Deflection tip BC (optional)
04	3028000	CB-122 Washer brass

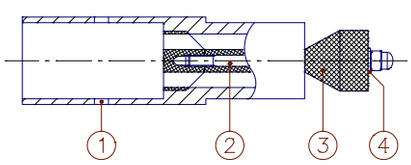

CB-1 and 2 Parts List

Item	Part no.	Description		
01	2112000	AHBN-8 1/2" (13 mm) nozzle TC		1
02	2113000	AHBN-10 5/8" (16 mm) nozzle TC		1
03	3015002	CB-111 Tool holder		1
04	3016000	CB-110/1 Deflection tip TC	◇	1
05	3018001	CB-112/1 Stem support assembly TC	◇	1
06	3020002	CB-113/1 Throat sleeve TC (50mm)	◇	1
07	3020003	CB-113/1 Throat sleeve TC (65mm)	◇	1
08	3023002	CB-115 Throat rod	◇	1
09	3024002	CB-116 Tip holding nut	◇	1
11	3025002	CB-117/1 Protection sleeve for CBC-1		1
12	3025001	CB-117/2 Protection sleeve for CBC-2		1
13	3026002	CB-118 Curled lock nut		2

CB-1 and 2 Parts List

Item	Part no.	Description		
14	3027002	CB-119 Stem support gasket	◇	2
15	3028000	CB-122 Washer brass	◇	3
16	3029000	CB-123 O-ring	◇	1
17	3029012	Connection tube		1
18	2163000	CFT cast iron quick coupling (optional)		1
19	2135000	CHE-2 nozzle holder, aluminum (optional)		1
20	3016100	CB-110/2 Deflection tip Boron Carbide (optional)		1
21	3016200	CB-110/3 Deflection tip Roctec (optional)		1

All (◇)-marked items are included in Circleblast Spare Parts kit (part no. 3022002) in quantities shown.

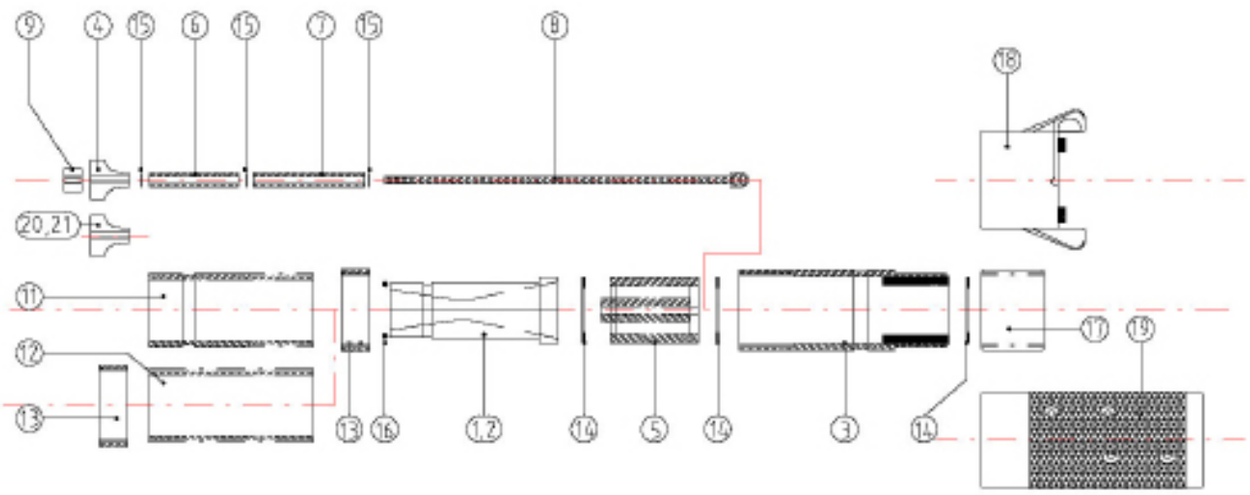

Centering collars for Circleblast

Item	Part no.	Description
	3003300	CBC-1 Centering collars complete for pipes 3" to 5" (76 - 127 mm) I.D. Includes collars and four six-button sets

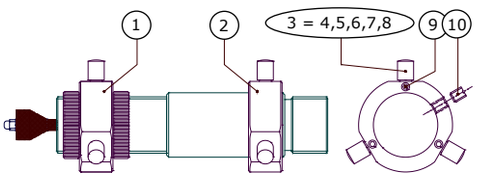

Spare parts for CBC-1 centering collars

1	3004000	Front collar, cad-plate
2	3005000	Rear collar, cad-plate
3	3006000	Complete set of centering pins (5 x set)
4	3006500	Centering pin for 75mm ID pipe (1 pc.)
5	3007000	Centering pin for 83mm ID pipe (1 pc.)
6	3008000	Centering pin for 97mm ID pipe (1 pc.)
7	3009000	Centering pin for 107mm ID pipe (1 pc.)
8	3010000	Centering pin for 123mm ID pipe (1 pc.)
9	3010100	Bolt
10	3010200	Collar locking bolt

Centering carriage for Circleblast

Item	Part no.	Description
	3011000	CBC-2 Centering collars complete for pipes 5" to 12" (127 - 305 mm) I.D.

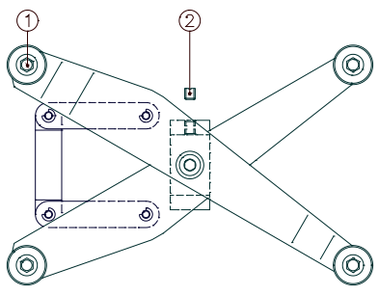

Spare parts for CBC-1 centering collars

1	3012000	Wheel complete
2	3010200	Locking bolt

Spinnerblast Internal Pipe Blaster

The Spinnerblast tool cleans the interior of pipes up to 12 meters long and ranging in size from 203 mm (8”) to 915 mm (36”) I.D. The tool connects to most abrasive blasting machines in place of a standard nozzle.

As the tool passes through the length of the pipe being cleaned, abrasive is ejected by two special nozzles mounted on a rotating head. Optimal rotating speed is controlled by the braking system. An adjustable centering carriage supports the tool through the pipe. The chart below shows the recommended centering legs, nozzle sizes and compressor capacities for different pipe diameters.

Features and benefits

- Constant cleaning of internal surface
- Cleaning with the highest speed possible
- Saving on time and abrasives
- Adjustable setup for the best cleaning speed
- Easy handling and no down-time
- Blast in only one drive through
- Adjustable for all kind of abrasive
- Very rigged construction

PIPEDIAMETER in (mm)	TOOL	TOOL RANGE in (mm)	CENTERING DEVICE	REQUIRED NOZZLE	AIR CONSUMPTION (cfm)	AIR CONSUMPTION (m³/min)
8” - 36”	SB-636-A	8” – 10” (203 - 254 mm)	SPB-19 use 120 mm legs	2 x ASB 13 2 x ASB-14 2 x ASB-16	200 300 450	5.7 8.5 12.8
	SB-636-A	10”- 15” (254 - 381 mm)	SPB-19 use 190 mm legs	2 x ASB-15	300	8.5
	SB-636-A	15”- 23” (381 - 584 mm)	SPB-19 use 290 mm legs	2 x ASB-17	450	12.8
	SB-636-A	23”- 36” (584 - 915 mm)	SPB-19 use 460 mm legs	2 x ASB-17	450	12.8

ORDERING INFORMATION

Part no.	Description
3030000	SB-636-A Spinnerblast incl. SPB-19 caririage, excl. nozzles
3032000	SB-636-C Repair kit containing ◇-marked items in quantities below.

Spinnerblast Internal Pipe Blaster

SPB Spinnerblast Internal Pipe Blaster parts list				
Item	**Part no.**	**Description**		
01	3033000	Pipe plug 1” (25 mm)	◇	4
02	3035000	Rotating nozzle head	◇	1
03	3036000	Brake housing		
04	2107000	Nozzle TC – 6.0 mm orifice, 49 mm long		
05	2108000	Nozzle TC – 8.0 mm orifice, 49 mm long		
06	2109000	Nozzle TC – 8.0 mm orifice, 80 mm long		
07	2110000	Nozzle TC – 9.5 mm orifice, 49 mm long		
08	2111000	Nozzle TC – 9.5 mm orifice, 103 mm long		
09	3037000	Set screw M6 x 8 mm		
10	3038000	Machine screw 65 mm		
11	3039000	Locking pin		
12	3040000	Brake with lining	◇	1
13	3041000	Tube	◇	1
14	3043000	Set screw M5 x 6 mm		
15	3044000	Double seal light bearing	◇	2
16	3045100	Housing		
16A	3045200	Housing bearing seal		
17	3046000	Tube lock ring	◇	2
18	3047000	Bearing seal	◇	1
19	3048000 3048100	Leather dust seal Teflon dust seal (optional)	◇	30
20	3049000	Washer, tungsten carbide	◇	2
21	3050000	End plate, rear		
22	3051000	Machine screw 35 mm		
23	3052000	Locking nut for rear end plate		
24	3053000	Rubber lined nipple 1¼” (32 mm)	◇	2
25	2163000	CFT Quick coupling (cast iron)		
All (◇)-marked items are included in Spinnerblast Spare Parts kit (art.nr. 3032000) in quantities shown.				

SPB Spinnerblast Carriage parts list		
Item	**Part no.**	**Description**
	3055000	Adjustable centering carriage
01	3059000	Carriage collar
02	3056000	Carriage wheel
03	3057000	Arms with wheels
04	3058000	Set of centering legs
05	3060000	SPB-19/12 Centering leg 12 cm
06	3061000	SPB-19/19 Centering leg 19 cm
07	3062000	SPB-19/29 Centering leg 29 cm
08	3063000	SPB-19/46 Centering leg 46 cm
09	3063100	Collar locking screw

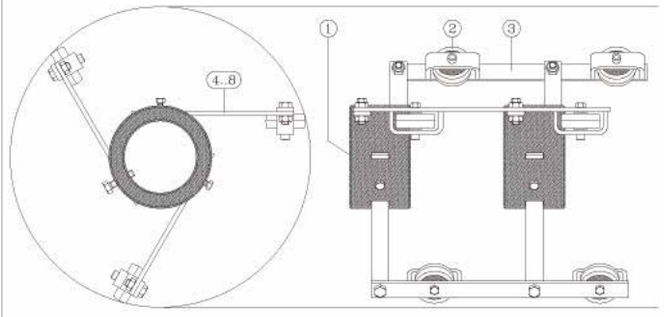

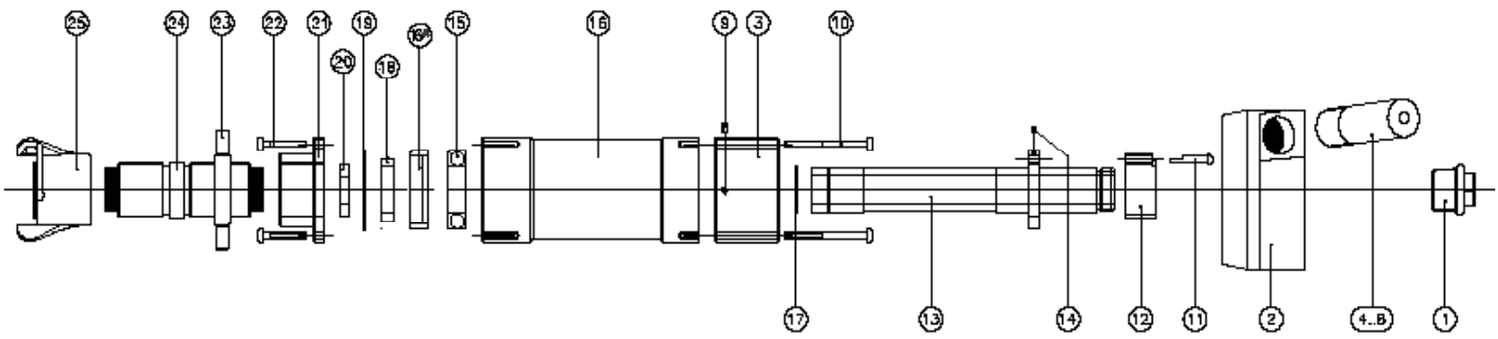

Jumbo Internal Pipe Blaster

The Jumbo Internal Pipe Blaster tool cleans the interior of pipes up to 12 meter long and ranging in size from 1016 mm (40”) to 1930 mm (76”) I.D. The tool connects to most abrasive blasting machines in place of a standard nozzle.

As the tool passes through the length of the pipe being cleaned, abrasive is ejected by two special nozzles mounted on a rotating head. Optimal rotating speed is controlled by the braking system. An adjustable centering carriage supports the tool through the pipe.

Features and benefits

- Constant cleaning of internal surface
- Cleaning with the highest speed possible
- Saving on time and abrasives
- Adjustable setup for the best cleaning speed
- Easy handling and no down-time
- Blast in only one drive through
- Adjustable for all kind of abrasive
- Very rigged construction

ORDERING INFORMATION	
Part no.	**Description**
3400000	JIPB-I Jumbo incl. carriage, excl. nozzles
3403400	JIPB-36 Repair kit. Containing ◇-marked items in quantities part list.

Jumbo Internal Pipe Blaster - nozzles	
Part no.	**Description**
2007000	ATSDX-4 Tungsten Carbide long venturi nozzle, 6.5 mm orifice, length 135 mm, 1¼” (32 mm) inlet and fine thread
2008000	ATSDX-5 Tungsten Carbide long venturi nozzle, 8.0 mm orifice, length 145 mm, 1¼” (32 mm) inlet and fine thread
2009000	ATSDX-6 Tungsten Carbide long venturi nozzle, 9.5 mm orifice, length 170 mm, 1¼” (32 mm) inlet and fine thread

Jumbo Internal Pipe Blaster

Jumbo Internal Pipe Blaster - parts list				
Item	**Part no.**	**Description**		
01	3400100	JIPB-1 Bolt M10 x 70		
02	3400200	JIPB-2 Pipe plug	◇	4
03	3400300	JIPB-3 Nozzle head		
04	3400400	JIPB-4/32 Washer		
05	3400500	JIPB-5 Distance ring		
06	3400600	JIPB-6 Bolt M6 x 10		
07	3400700	JIPB-7 Washer		
08	3400800	JIPB-8 Bearing seal	◇	2
09	3400900	JIPB-9 Adaptor seal		
10	3401000	JIBP-10 Lock ring	◇	1
11	3401100	JIPB-11 Bearing	◇	2
12	3401200	JIPB-12 Flange housing		
13	3401300	JIPB-13 Protection ring	◇	2
14	3401400	JIPB-14 Housing (alu)		
15	3401500	JIPB-15 Housing (steel)		
16	3401600	JIPB-16 Bushing	◇	1
17	3401700	JIPB-17 Tube with flange		
18	3401800	JIPB-18/33 Bolt M10	◇	4
19	3401900	JIPB-19/28 Washer M8		
20	3402000	JIPB-20 Bolt M8x25		
21	3402100	JIPB-21 Cast iron coupling		
24	3402200	JIPB-24 Carriage collar		
25	3402300	JIPB-25 Bolt M10x25		
26	3402400	JIPB-26 Centering leg		
27	3402500	JIPB-27 Clamp		
28	3402600	JIPB-28/19 Washer M8		
29	3402700	JIPB-29 Bolt		
30	3402800	JIPB-30 Wheel Ø140x35 GL-15		
31	3402900	JIPB-31 Guide bushing		
32	3403000	JIPB-32 Washer		
33	3403100	JIPB-33/18 Bolt M10		
34	3403200	JIPB-34 Bolt M10x65		
35	3403300	JIPB-35 Centering carriage, complete		
All (◇)-marked items are included in 3403400 Jumbo Spare Parts kit				

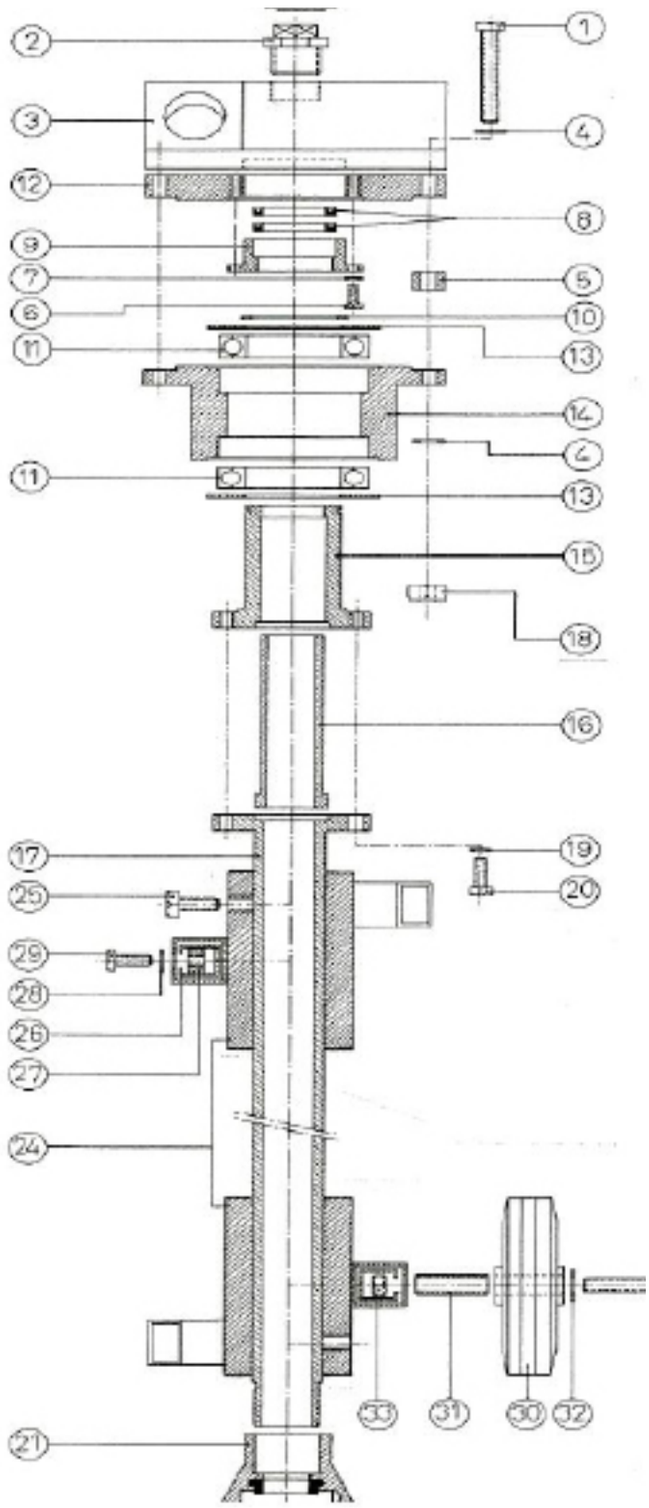

Pipecoater-I for 4”- 7” ID Pipes

PIPECOATER-I is designed to coat the inside of pipe or tubing without the need to rotate pipe or tubing and to apply an even paint film thickness throughout. Generally, any type of coating may be used in this tool that can be airless sprayed. To obtain the best possible production, one man should operate the Control Gun while another man pulls the tool through the pipe or tubing.

The Airblast Pipecoater provides an innovative and efficient solution for applying paint to the inside of pipe, tubing or other cylindrical structures. With the Pipecoater, you can apply a uniform layer of paint at remarkable speed.

The Pipecoater I tool is available in four packages to suit jobs with differing lengths of pipes: 2, 4, 6 or 12 mtrs.
Six sizes of spray tip are available, ranging from .018” to .043’ to suit the specified coating.

PIPECOATER-I is developed for pipe or tubing ranging from 90 mm to 180 mm (4” - 7”) ID.
PIPECOATER-I can be connected to a suitable airless paint spray machine of minimum 45:1 ratio.

Advantages
- Efficiently handles wide range of coatings
- Applies uniform layer at remarkable speed
- No need to rotate the pipe or tubing
- Unique gun assembly ensures precise control
- Air-controlled centering carriage legs easily adjust for gradual pipe bends

ORDERING INFORMATION

PIPECOATER-I INTERNAL PIPECOATER ASSEMBLIES

Part no.	Description
	For pipes with ID of 90 mm to 180 mm (4” - 7”)
7100100	Pipecoater-I, for use up to 2 meters (6 ft.) long pipe incl.: 3.0 meters (10 ft.) Air Control Hose 3.5 meters (11 ft.) Paint Spray Hose
7100300	Pipecoater-I, for use up to 4 meters (12 ft.) long pipe incl.: 5.0 meters (16 ft.) Air Control Hose 5.5 meters (18 ft.) Paint Spray Hose
7100500	Pipecoater-I, for use up to 6 meters (20 ft.) long pipe incl.: 10.0 meters (32 ft.) Air Control Hose 10.5 meters (34 ft.) Paint Spray Hose
7100700	Pipecoater-I, for use up to 12 meters (40 ft.) long pipe incl.: 15.0 meters (48 ft.) Air Control Hose 16.0 meters (52 ft.) Paint Spray Hose
	Delivery includes: • Paint Spray Tool with Centering Legs • Air Control Group and Gun • Air Control Hose • High Pressure Paint Hose

Pipecoater-I for 4”- 7” ID Pipes

PIPECOATER-I HOSES		
7100900	Air Control Hose 3.0 meters	(10 ft.)
7101000	Air Control Hose 5.0 meters	(16 ft.)
7101100	Air Control Hose 10.0 meters	(32 ft.)
7101200	Paint Spray Hose 3.5 meters	(11 ft.)
7101300	Paint Spray Hose 5.5 meters	(18 ft.)
7101400	Paint Spray Hose 10.5 meters	(34 ft.)
PIPECOATER-I FLOW CONTROL TIPS		
7101500	Flow control tip 0.018” orifice	
7101600	Flow control tip 0.021” orifice	
7101700	Flow control tip 0.026” orifice	
7101800	Flow control tip 0.031” orifice	
7101900	Flow control tip 0.036” orifice	
7102000	Flow control tip 0.043” orifice	
PIPECOATER-I GUN ASSEMBLY		
7102100	Spray gun, incl. hose adaptor assembly	
7102200	Air group for spray gun	
7102300	Adapter for silver gun	
PIPECOATER-I REPAIR KITS AND RECOMMENDED SPARE PARTS		
7112900	Wheel kit, Pipecoater-I includes 7112500, 7112600 and 7112700. (6 pcs. required)	
7105000	O-ring set, Air Control Hose	
7105100	O-ring set, Pipecoater-I	
7111400	Strainer (2 pcs.)	
7119500	Needle bearing	
7118400	Paint tube	
7118500	T-piece	
	Flow control tips (sizes to be specified)	

Pipecoater-II for 7” - 37” ID Pipes

PIPECOATER-II is designed to coat the inside of pipe or tubing without the need to rotate pipe or tubing and to apply an even paint film thickness throughout. Generally, any type of coating may be used in this tool that can be airless sprayed. To obtain the best possible production, one man should operate the Control Gun while another man pulls the tool through the pipe or tubing.

The Airblast Pipecoater provides an innovative and efficient solution for applying paint to the inside of pipe, tubing or other cylindrical structures. With the Pipecoater, you can apply a uniform layer of paint at remarkable speed.

The Pipecoater II tool is available in four packages to suit jobs with differing lengths of pipes: 2, 4, 6 or 12 mtrs.
Six sizes of spray tip are available, ranging from .018” to .043’ to suit the specified coating.

PIPECOATER-II is developed for pipe or tubing ranging from 180 mm to 950 mm (7” - 37”) ID.
PIPECOATER-II can be connected to a suitable airless paint spray machine of minimum 45:1 ratio.

Advantages
- Efficiently handles wide range of coatings
- Applies uniform layer at remarkable speed
- No need to rotate the pipe or tubing
- Unique gun assembly ensures precise control
- Air-controlled centering carriage legs easily adjust for gradual pipe bends

ORDERING INFORMATION

PIPECOATER-II INTERNAL PIPECOATER ASSEMBLIES

Part no.	Description
	For pipes with ID of 180 mm to 950 mm (7” - 37”)
7100200	Pipecoater-II, for use up to 2 meters (6 ft.) long pipe incl.: 3.0 meters (10 ft.) Air Control Hose 3.5 meters (11 ft.) Paint Spray Hose
7100400	Pipecoater-II, for use up to 4 meters (12 ft.) long pipe incl.: 5.0 meters (16 ft.) Air Control Hose 5.5 meters (18 ft.) Paint Spray Hose
7100600	Pipecoater-II, for use up to 6 meters (20 ft.) long pipe incl.: 10.0 meters (32 ft.) Air Control Hose 10.5 meters (34 ft.) Paint Spray Hose
7100800	Pipecoater-II, for use up to 12 meters (40 ft.) long pipe incl.: 15.0 meters (48 ft.) Air Control Hose 16.0 meters (52 ft.) Paint Spray Hose
	Delivery includes: • Paint Spray Tool with Centering Legs • Air Control Group and Gun • Air Control Hose • High Pressure Paint Hose

Pipecoater-II for 7” - 37” ID Pipes

PIPECOATER-II HOSES		
7100900	Air Control Hose 3.0 meters	(10 ft.)
7101000	Air Control Hose 5.0 meters	(16 ft.)
7101100	Air Control Hose 10.0 meters	(32 ft.)
7101200	Paint Spray Hose 3.5 meters	(11 ft.)
7101300	Paint Spray Hose 5.5 meters	(18 ft.)
7101400	Paint Spray Hose 10.5 meters	(34 ft.)
PIPECOATER-I FLOW CONTROL TIPS		
7101500	Flow control tip 0.018” orifice	
7101600	Flow control tip 0.021” orifice	
7101700	Flow control tip 0.026” orifice	
7101800	Flow control tip 0.031” orifice	
7101900	Flow control tip 0.036” orifice	
7102000	Flow control tip 0.043” orifice	
PIPECOATER-II GUN ASSEMBLY		
7102100	Spray gun, incl. hose adaptor assembly	
7102200	Air group for spray gun	
7102300	Adapter for silver gun	
PIPECOATER-II REPAIR KITS AND RECOMMENDED SPARE PARTS		
7119200	Rotating head kit, Pipecoater-II includes 7114600, 7118000, 7114700 and 7114800	
7119300	Wheel kit, Pipecoater-II includes 7117800, 7118000, 7118100, 7118200 and 7119000	
7105000	O-ring set, Air Control Hose	
7105200	O-ring set, Pipecoater-II	
7111400	Strainer (2 pcs.)	
7113600	Blade (3 pcs.)	
7114000	Bearing	
7113100	Ball bearing	
	Flow control tips (sizes to be specified)	

Pipecoater-III/125 for 3” - 5” ID Pipes (new model)

PIPECOATER-III/125 is designed to coat the inside of pipe or tubing ranging from 76 to 125 mm (3” - 5”) ID without the need to rotate pipe or tubing and to apply an even paint film thickness throughout. Generally, any type of coating may be used in this tool that can be airless sprayed.

PIPECOATER-III/125 tool can be connected to a suitable airless paint spray machine of minimum 45:1 ratio. The unit is connected to the end of a pipe lance and connected to the high pressure paint hose coming from the spray pump. An air hose is required to connect to the PIPECOATER-III/125. Once the PIPECOATER-III/125 is positioned within the pipe or tubing, regulate the paint and air flow to the correct pressure. The spray gun is triggered to begin the paint flow. The paint will be sprayed through a spin nozzle controlled by the air flow in a 360° spraying pattern.

To stop the PIPECOATER-III/125, release the spray gun trigger and shut off the air supply to the unit. For the best possible result, one man should operate the spray gun while another man pulls the tool through the pipe or tubing.

Advantages

- Efficiently handles wide range of coatings
- Applies uniform layer at remarkable speed
- No need to rotate the pipe or tubing

ORDERING INFORMATION	
PIPECOATER-III/125 INTERNAL PIPECOATER ASSEMBLY	
	PIPECOATER-III range are economy models, developed for pipe or tubing ranging from 76 mm to 900 mm (3” - 36”) ID. The three models are executed with different centering devices which must be set to the right diameter manually.
7301001	PIPECOATER-III/125 complete unit with centering carriage. For pipes with ID of 76 mm to 125 mm (3” - 5”)

PIPECOATER-III/125 SPARE PARTS		
Item	**Part no.**	**Description**
1	7310000	Air motor
2	7310100	Axle
3	7310200	Nut M10
4	7310300	Rotating head dia 54 mm
5	7310400	Bolt M6 x 8
6	7310500	Aluminium housing
7	7310600	Rear end plate
8	7310700	Air tube ¼” x 170 mm
9	7310800	Nut ¼” x 8 mm
15	3006000	Complete set of centering pins (5 x set)
	3006500	Centering pin for 75mm ID pipe (1 pc.)
	3007000	Centering pin for 83mm ID pipe (1 pc.)
	3008000	Centering pin for 97mm ID pipe (1 pc.)
	3009000	Centering pin for 107mm ID pipe (1 pc.)
	3010000	Centering pin for 123mm ID pipe (1 pc.)
16	3010100	Bolt M6
18	3010200	Locking bolt M10
19	7315700	Elbow ⅛” x ⅛” MF
20	7315800	Coupling ⅛” x dia 6 mm
21	7315900	PU Hose dia 6 - 8 / 15 cm
22	7316000	Coupling ¼” x dia 6 mm
23	7314500	Filter holder
24	7314600	Tip filter 100 mesh (standard)
	7314650	Tip filter 60 mesh
25	7315000	Flow control tip 0,042” orifice (standard)
	7315100	Flow control tip 0,020” orifice
	7315200	Flow control tip 0,028” orifice
	7315300	Flow control tip 0,060” orifice
	7315400	Flow control tip 0,064” orifice
	7315500	Flow control tip 0,076” orifice
26	7314700	Tip holder
27	7316100	Inlet housing ⅛” x ¼”
28	7316200	Elbow dia 6 - ⅛”
29	7316300	Paint tube dia 4 - dia 6
30	7316400	Centering collar dia 48 mm

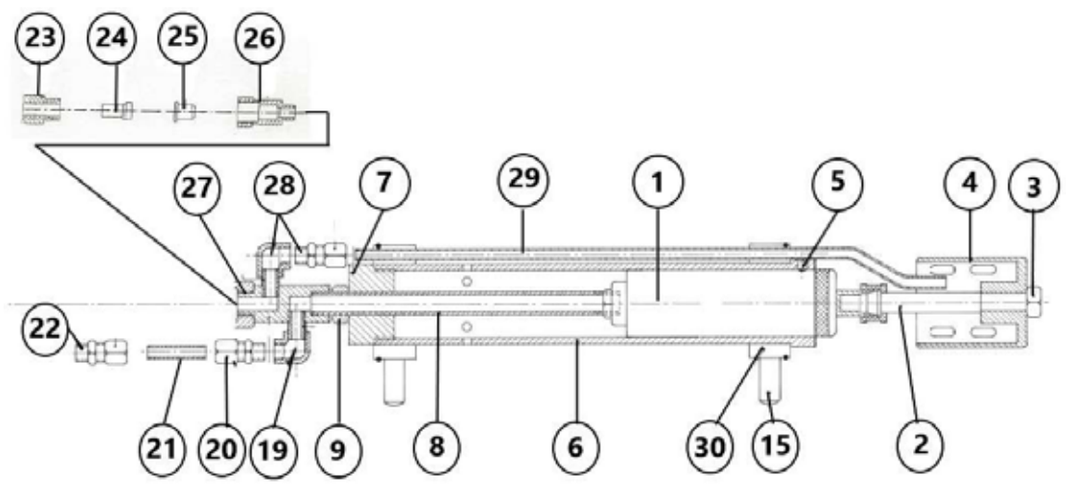

Pipecoater-III/125 for 3” - 5” ID Pipes (old model)

Spare parts for old model PIPECOATER-III/125 are still available.

PIPECOATER-III/125 SPARE PARTS		
Item	**Part no.**	**Description**
1	7310000	Air motor
2	7310100	Axle
3	7310200	Nut (M10)
4	7310300	Rotating head (diameter 54 mm)
5	7310400	Bolt (M6 x 8)
6	7310500	Aluminium housing
7	7310600	Rear end plate
8	7310700	Air tube (¼” x 8 mm)
9	7310800	Nut (¼” x 8 mm)
10	7310900	Inlet housing
11	7311000	Reduction nipple (½” x ¼”)
12	7311100	Threaded sleeve (⅛”x 21 mm)
13	7311200	Elbow (⅛” FF no. 090)
14	7311300	Coupling (¼” x 8 mm)
15	7311400	Centering collars
16	3006000	Centering button set (4 x six button set)
17	7311500	O-ring
18	7311160	Paint tube
23	7314500	Filter holder
24	7314600	Tip filter
25	7315000	Flow control tip 0,042” orifice (standard)
	7315100	Flow control tip 0,020” orifice
	7315200	Flow control tip 0,028” orifice
	7315300	Flow control tip 0,060” orifice
	7315400	Flow control tip 0,064” orifice
	7315500	Flow control tip 0,076” orifice
26	7314700	Tip holder

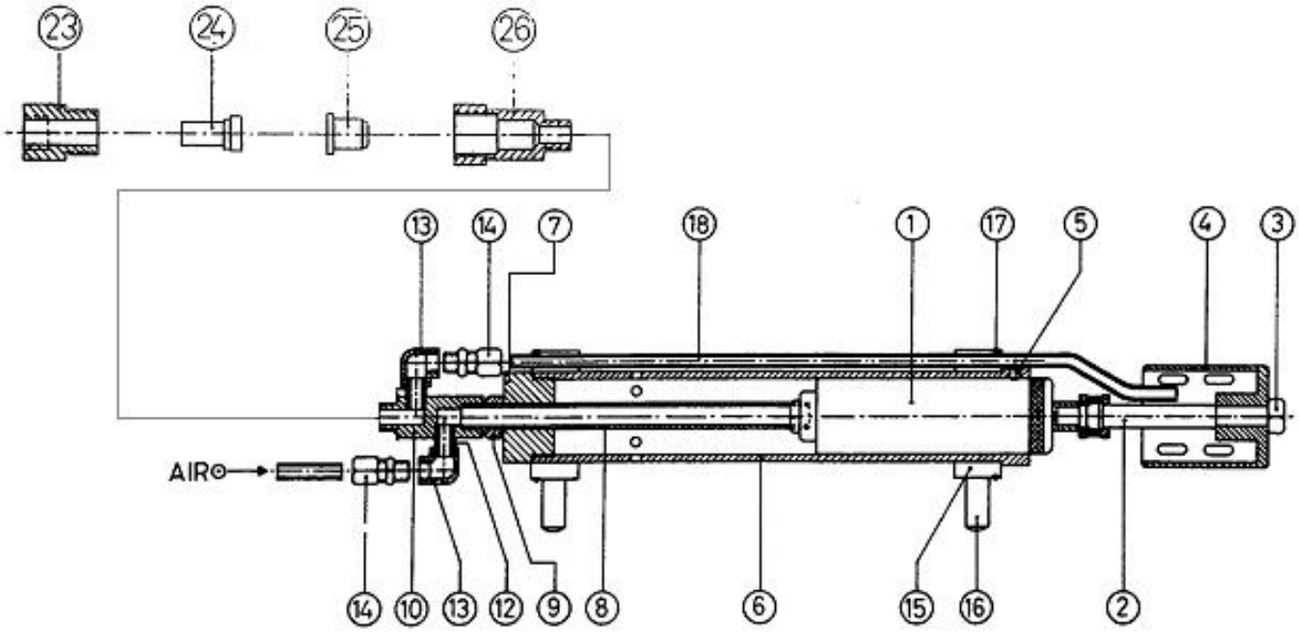

Pipecoater-III/300 for 5” - 12” ID Pipes

AIRBLAST

PIPECOATER-III/300 is designed to coat the inside of pipe or tubing ranging from 125 to 300 mm (5” - 12”) ID
without the need to rotate pipe or tubing and to apply an even paint film thickness throughout. Generally, any type of coating may be used in this tool that can be airless sprayed.

PIPECOATER-III/300 tool can be connected to a suitable airless paint spray machine of minimum 45:1 ratio. The unit is connected to the end of a pipe lance and connected to the high pressure paint hose coming from the spray pump. An air hose is required to connect to the PIPECOATER-III/300. Once the PIPECOATER-III/300 is positioned within the pipe or tubing, regulate the paint and air flow to the correct pressure. The spray gun is triggered to begin the paint flow. The paint will be sprayed through a spin nozzle controlled by the air flow in a 360° spraying pattern.

To stop the PIPECOATER-III/300, release the spray gun trigger and shut off the air supply to the unit. For the best possible result, one man should operate the spray gun while another man pulls the tool through the pipe or tubing.

Advantages

- Efficiently handles wide range of coatings
- Applies uniform layer at remarkable speed
- No need to rotate the pipe or tubing

ORDERING INFORMATION	
PIPECOATER-III/300 INTERNAL PIPECOATER ASSEMBLY	
	PIPECOATER-III range are economy models, developed for pipe or tubing ranging from 76 mm to 900 mm (3” - 36”) ID. The three models are executed with different centering devices which must be set to the right diameter manually.
7302000	PIPECOATER-III/300 complete unit with CBC-2 centering carriage. For pipes with ID of 125 mm to 300 mm (5” - 12)

PIPECOATER-III/300 SPARE PARTS		
Item	**Part no.**	**Description**
1	7310000	Air motor
2	7310100	Axle
3	7310200	Nut (M10)
4	7312000	Rotating head (diameter 69 mm)
5	7310400	Bolt (M6 x 8)
6	7310500	Aluminium housing
7	7312100	Inlet housing
8	7312200	Coupling (¼” x 8 mm)
9	7315600	Bolt (M10 x 10)
10	7313700	Rear end plate
11	7312500	Paint tube
12	2176100	CCC-38/F Quick coupling
13	2178100	IF-14 Quick connect coupling
14	3011000	CBC - 2 Centering carriage
15	7314800	Lock nut
16	3025000	Protection sleeve threaded
17	7314000	Paint tube stainless steel
18	7314100	Nut
23	7314500	Filter holder
24	7314600	Tip filter
25	7315000	Flow control tip 0,042” orifice (standard)
	7315100	Flow control tip 0,020” orifice
	7315200	Flow control tip 0,028” orifice
	7315300	Flow control tip 0,060” orifice
	7315400	Flow control tip 0,064” orifice
	7315500	Flow control tip 0,076” orifice
26	7314700	Tip holder

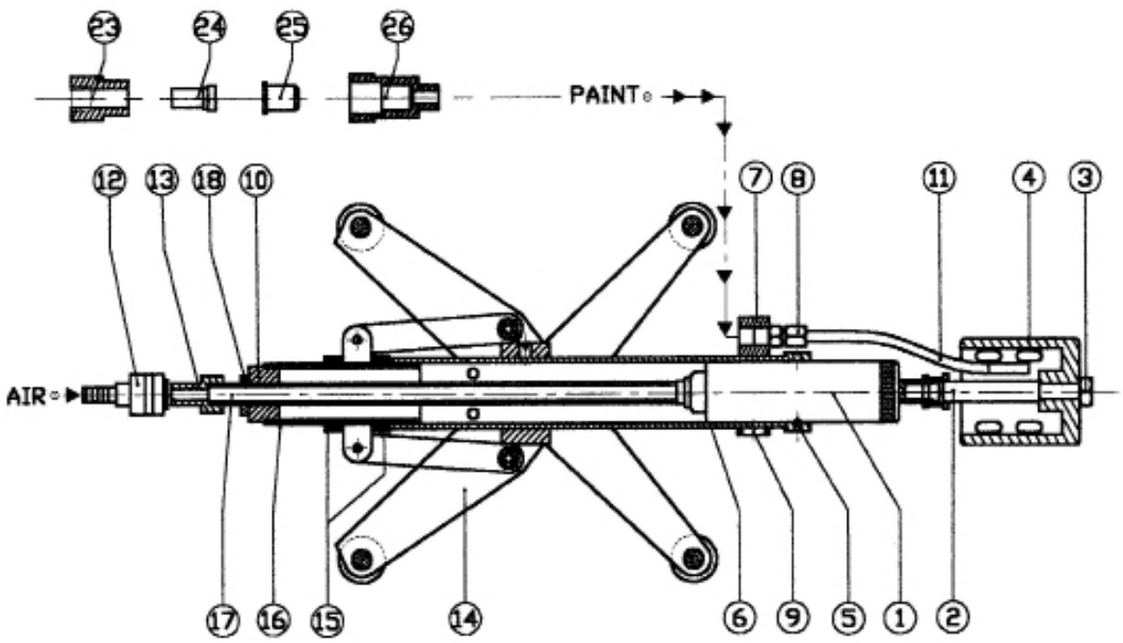

Pipecoater-III/900 for 12” - 36” ID Pipes

PIPECOATER-III/900 is designed to coat the inside of pipe or tubing ranging from 300 to 900 mm (12” - 36”) ID without the need to rotate pipe or tubing and to apply an even paint film thickness throughout. Generally, any type of coating may be used in this tool that can be airless sprayed.

PIPECOATER-III/900 tool can be connected to a suitable airless paint spray machine of minimum 45:1 ratio. The unit is connected to the end of a pipe lance and connected to the high pressure paint hose coming from the spray pump. An air hose is required to connect to the PIPECOATER-III/900. Once the PIPECOATER-III/900 is positioned within the pipe or tubing regulate the paint and air flow to the correct pressure. The spray gun is triggered to begin the paint flow. The paint will be sprayed through a spin nozzle controlled by the air flow in a 360° spraying pattern.

To stop the PIPECOATER-III/900, release the spray gun trigger and shut off the air supply to the unit. For the best possible result, one man should operate the spray gun while another man pulls the tool through the pipe or tubing.

Advantages

- Efficiently handles wide range of coatings
- Applies uniform layer at remarkable speed
- No need to rotate the pipe or tubing

ORDERING INFORMATION	
PIPECOATER-III/900 INTERNAL PIPECOATER ASSEMBLY	
	PIPECOATER-III range are economy models, developed for pipe or tubing ranging from 76 mm to 900 mm (3” - 36”) ID. The three models are executed with different centering devices which must be set to the right diameter manually.
7303000	PIPECOATER-III/900 complete unit with centering carriage. For pipes with ID of 300 mm to 900 mm (12” - 36”)

PIPECOATER-III/900 SPARE PARTS		
Item	**Part no.**	**Description**
1	7310000	Air motor
2	7310100	Axle
3	7310200	Nut (M10)
4	7312000	Rotating head (diameter 69 mm)
5	7310400	Bolt (M6 x 8)
6	7310500	Aluminium housing
7	7312100	Inlet housing
8	7312200	Coupling (¼” x 8 mm)
9	7315600	Bolt (M10 x 10)
10	7313700	Rear end plate
11	7312500	Paint tube
12	2176100	CCC-38/F Quick coupling
13	2178100	IF-14 Quick connect coupling
14	7313000	Bushing
15	3059000	Centering collars
16	3025000	Protection sleeve threaded
17	7314000	Paint tube stainless steel
18	7314100	Nut
19	7314200	Tube holder
20	7314300	Nut
21	7314400	Paint tube, brass
22	3057000	Arm with wheels
23	7314500	Filter holder
24	7314600	Tip filter
25	7315000	Flow control tip 0,042” orifice (standard)
	7315100	Flow control tip 0,020” orifice
	7315200	Flow control tip 0,028” orifice
	7315300	Flow control tip 0,060” orifice
	7315400	Flow control tip 0,064” orifice
	7315500	Flow control tip 0,076” orifice
26	7314700	Tip holder
27	3058000	Set of centering legs (4 x 6 pieces)

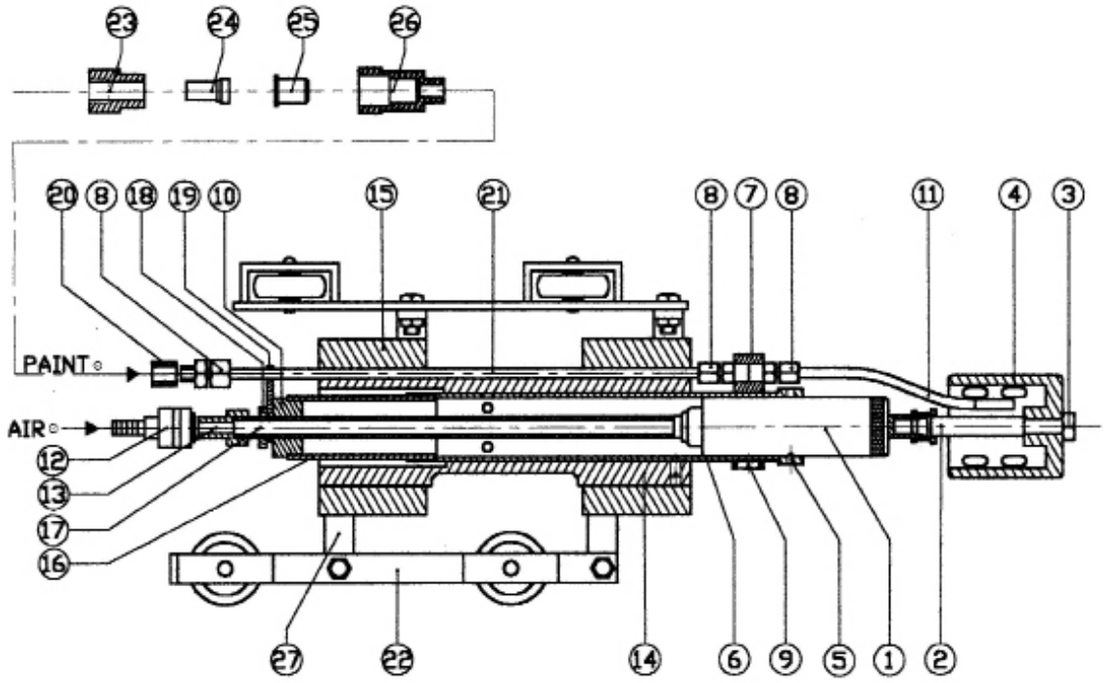

Pipecoater-IV for 1” - 12” ID Pipes

AIRBLAST

PIPECOATER-IV tool is designed to coat the inside of pipe or tubing ranging from 25 to 300 mm (1” - 12”) ID without the need to rotate pipe or tubing and to apply an even paint film thickness throughout. Generally, any type of coating may be used in this tool that can be airless sprayed.

PIPECOATER-IV tool can be connected to a suitable airless paint spray machine of minimum 45:1 ratio. The unit is connected to the end of a pipe lance and connected to the high pressure paint hose coming from the spray pump. An air hose is required to connect to the PIPECOATER-IV. Once the PIPECOATER-IV is positioned within the pipe or tubing regulate the paint and air flow to the correct pressure. The spray gun is triggered to begin the paint flow. The paint will be sprayed through the round spray nozzle controlled by the air flow in a 360° spraying pattern.

To stop the PIPECOATER-IV, release the spray gun trigger and shut off the air supply to the unit. For the best possible result, one man should operate the spray gun while another man pulls the tool through the pipe or tubing.

Advantages

- Efficiently handles wide range of coatings
- Applies uniform layer at remarkable speed
- No need to rotate the pipe or tubing

ORDERING INFORMATION	
PIPECOATER-IV INTERNAL PIPECOATER ASSEMBLY	
7304001	PIPECOATER-IV – bare – including TNSSTC 6 tip (1.07mm) assy and AB-SS 100 filter (parts 1 – 4, 6 - 10 + 12). Optional with centering collars for pipes with ID: 76 – 125mm (3” to 5”) and with 125 – 300mm (5” to 12”).

PIPECOATER-IV SPARE PARTS		
Item	**Part no.**	**Description**
1	7304008	Tip nut SS
2	7304017	TNSSTC 0.80 spray tip
	7304018	TNSSTC 0.90 spray tip
	7304019	TNSSTC 1 spray tip
	7304020	TNSSTC 1.5 spray tip
	7304021	TNSSTC 2 spray tip
	7304022	TNSSTC 3 spray tip
	7304023	TNSSTC 4 spray tip
	7304024	TNSSTC 6 spray tip
	7304025	TNSSTC 8 spray tip
	7304026	TNSSTC 9 spray tip
	7304027	TNSSTC 10 spray tip
	7304028	TNSSTC 12 spray tip
	7304029	TNSSTC 14 spray tip
	7304030	TNSSTC 15 spray tip
	7304031	TNSSTC 16 spray tip
	7304032	TNSSTC 18 spray tip
	7304033	TNSSTC 20 spray tip
	7304034	TNSSTC 22 spray tip
	7304035	TNSSTC 24 spray tip
	7304036	TNSSTC 26 spray tip
3	7030414	Tip filter AB-SS 50
	7304015	Tip filter AB-SS 100
	7304009	Tip filter AB-SS 200
4	7304003	Housing SS
5	7304005	Centering device 2” to 5”
6-10	7304010	Pipecoater, bare
11	7304006	Centering carriage 5” to 12”
12	7304007	Nylon washers (set of 2)

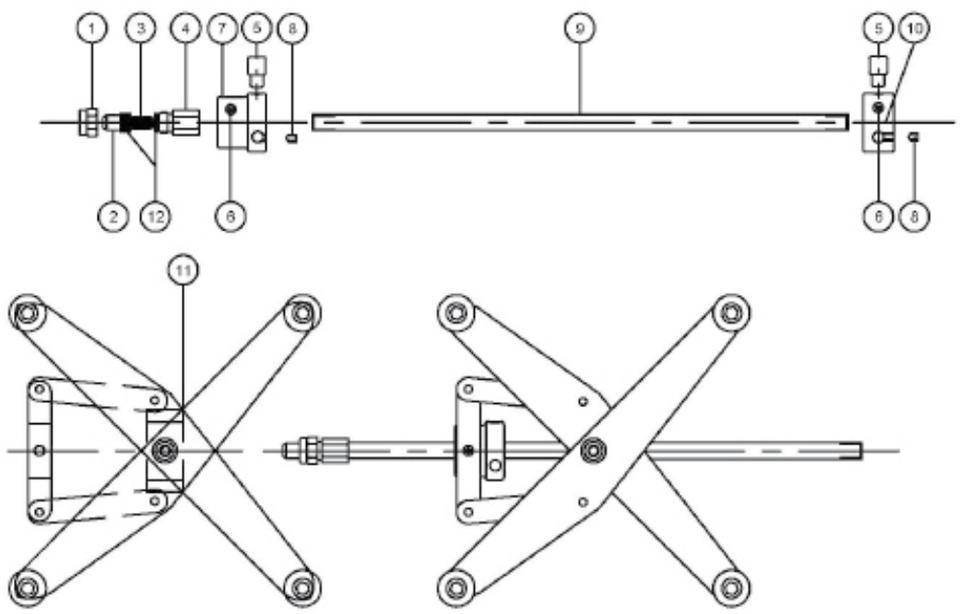

SWS Semi-automatic Winch System

The AIRBLAST semi-automatic winch system is specially developed for the Airblast Internal Pipe Cleaning Equipment such as the Circleblast, Spinnerblast and Jumboblast as well as for the Airblast Pipe Coating Equipment such as the Pipecoater-III/125/300/900.
This machine is designed with a PLC controlled hoisting system to pull at the blast hose with an adjustable constant speed to clean the inside of pipes. The speed can be adjusted from almost zero to 3mtr/minure or more.

The Airblast Winch system can be produced for all kind of power supplies: 230VAC 1 phase, 400VAC 3phases, 12VDC or 24VDC.

The travel speed of the Airblast Pipe Cleaners inside the pipe is operated and controlled by the control box which is mounted on the rigged frame. The control panel features the on/off switch as well the potential meter for the speed control which is adjustable from 0 to 100%. The semi-automatic winch system is made with high grade components to withstand the extreme environment of open blast cleaning, and has protection class IP55.

Advantages

- Constant cleaning of internal surface
- Cleaning with the highest speed possible
- Saving on time and abrasives
- Adjustable setup for the best cleaning speed
- Easy handling and no down-time
- Blast in only one drive through
- Adjustable for all kind of abrasive
- Very rigged construction
- Suitable for all kind of pipe internal diameters
- Semi-automatic, one operator can handle more machines or do other work

ORDERING INFORMATION

SWS Semi-automatic Winch System

Part no.	Description
8968001	Winch System 1 - 5 mtr./min.
8968003	Winch System 2 - 10 mtr./min.
8969004	Winch System 2 - 15 mtr./min.

Section 4 - Personal Protection Equipment

Product	Page
Extreme abrasive blasting helmet	92
ASTRO Abrasive blasting helmet	93
NOVA Abrasive blasting helmet	94
NOVA 1 Abrasive blasting helmet	95
NOVA 3 Advanced performance blasting helmet	96
Miniatura air supplied paintspray hood	98
HAF Helmet air filter	99
HAF Filter cartridges	100
PX4 Air belt	101
Climate control tube - CCT	102
Climate control tube - Vortex	103
GX4 Gas detection monitor	104
Blast light ABKR	106
Blast light HALO	107
Blast light L4 for NOVA 3	108
Blast & paint clothing	109
Cool vest	110

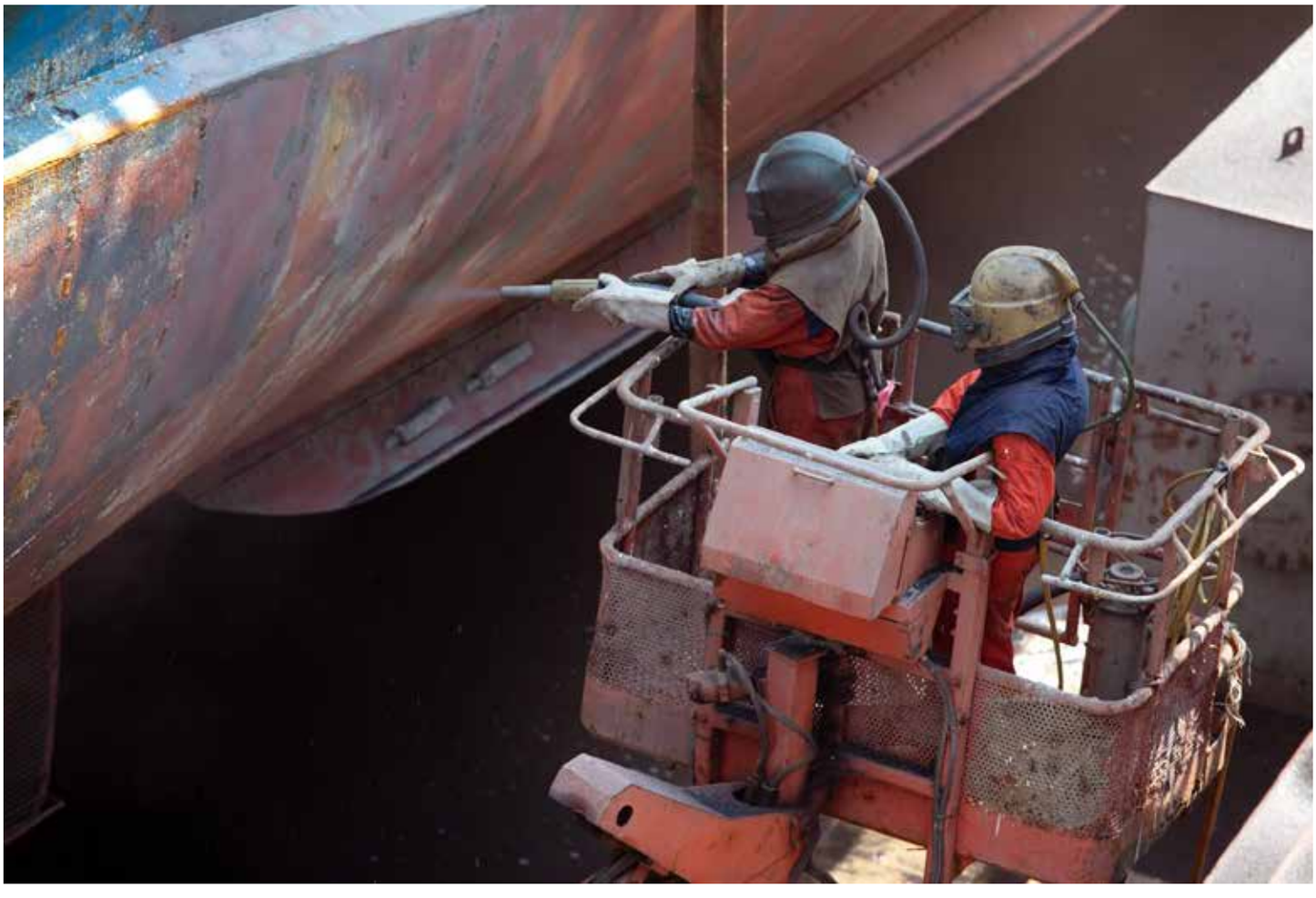

Extreme Abrasive Blasting Helmet

AIRBLAST

The Extreme abrasive blasting helmet is made of a lightweight glass fibre reinforced polyester with a blue rubber coating which limits the sound of rebounding blast particles to a minimum and protects the user from dust with a comfortable overpressure. The yellow airflow indicator shows whether sufficient air is being passed into the blasting helmet. The wire mesh screen and the disposable visor protect the main visor and can be easily exchanged. An exchangeable cotton neck seal ensures comfort and protection. A cape or jacket, available in leather, bisonyl or cotton, protects the user's chest, back, and shoulders. The Extreme can be perfectly combined with the Vortex Air Conditioner or the leather/cotton overall.

Features and benefits:

- The Extreme has a concentrated field of vision (156 x 102 mm)
- Adjustable headband for increased comfort
- All parts e.g. visors rubber seals are easy to replace
- Unique rubber coating decreases noise level and wear
- Fail safe airflow indicator for increased safety

ORDERING INFORMATION

Part no.	Description
4050000	Extreme-I blasting helmet, consist of helmet assembly, breathing tube, regulator, sound silencer, cape and cape
4050100	Extreme-II blasting helmet, same as above only with leather cape
4050200	Extreme-III blasting helmet, bare excluding breathing tube, regulator, sound silencer, cape and cape

EXTREME Parts List

Item	Part no.	Description		Item	Part no.	Description
1	4022000	Wire mesh screen 110 x 165 mm		10	4054000	Blouse cotton (optional)
2	4023000	Glass window 112 x 166 x 2,5 mm			4054100	Blouse leather (optional)
3	4024000	Acrylate window 102 x 156 x 2,5 mm		11	4015000	Waist belt
4	4025000	Rubber window gasket		12	4050900	Air inlet assembly
5	4050600	Window assembly		13	4051000	Corrugated hose 22mm
6	4050800	Air flow indicator		14	4018000	Silencer type P
7	4028000	Adjustable headband		15	4019000	Airflow regulator
8	4011000	Neck bib w/plastic zipper		16	4019100	Nipple CEJN 1/4" inner thread
9	4012000	Cape nylon		17	4053300	Cotton comfort hood
	4012100	Cape leather				

Optional Accessories

	4046100	Vortex Climate Control Tube complete with belt and regulator. Fits directly to breathing tube of Extreme Blast Helmet to supply a continuous flow of cool or warm air to your blast helmet.

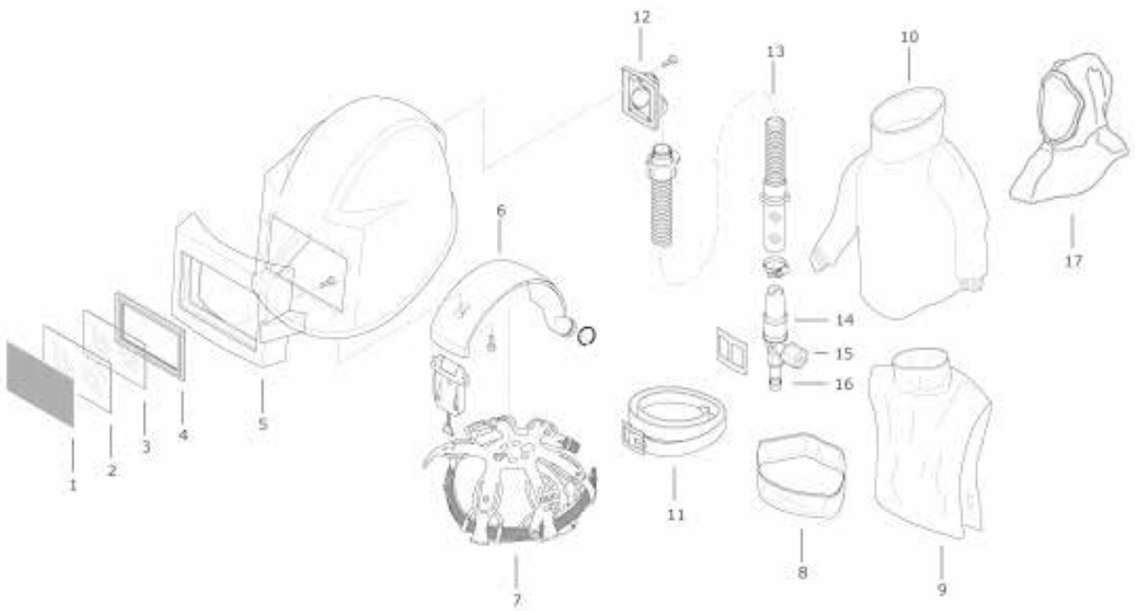

ASTRO Abrasive Blasting Helmet

The ASTRO abrasive blasting helmet is a compact lightweight (1.2 kg) blast helmet with a large flat lens which provides excellent vision without distortion. The Astro abrasive blasting helmet is your number one economy choice which meets standards worldwide including CE, Australian Standards and is approved by NIOSH.

Tear-off lenses
The Tear-off Lens System is a unique system of pre-folded tabs. This means workers can quickly tear off just one layered lens at a time. Contractors have reported a time saving of over 45 minutes a day per blaster using the Tear off Lenses system which results in increased productivity.

Features and benefits:

- Removable head suspension
- Sturdy visor frame with integral molded hinge
- Optional tear-off lens available
- Low flow indicator
- Hand strap
- Abrasive resistant polyethylene helmet shell
- Flexible breathing tube
- Flow control valve
- Replaceable cape cover band
- Durable nylon cape

ORDERING INFORMATION

Part no.	Description
4600000	ASTRO blasting helmet, consist of helmet assembly, breathing tube, regulator and nylon cape
4600100	ASTRO blasting helmet, same as above only with leather cape

ASTRO Parts List

Item	Part no.	Description
01	4600300	Visor
02	4600400	Visor strap
03	4600500	Cleat
04	4600600	Gasket seal
05	4600700	Suspension clips (set of 4)
06	4600800	Head suspension
07	4600900	Inner lens (set of 10)
08	4601000	Outer lens (set of 50)
	4601001	Tear-off lens (set of 50)
09	4601100	Cape coverband
10	4601200	Cape nylon
	4601300	Cape leather
11	4601400	Breathing tube
12	4601500	Air inlet assembly
13	4601600	Flow control valve
14	4601700	Belt and buckle

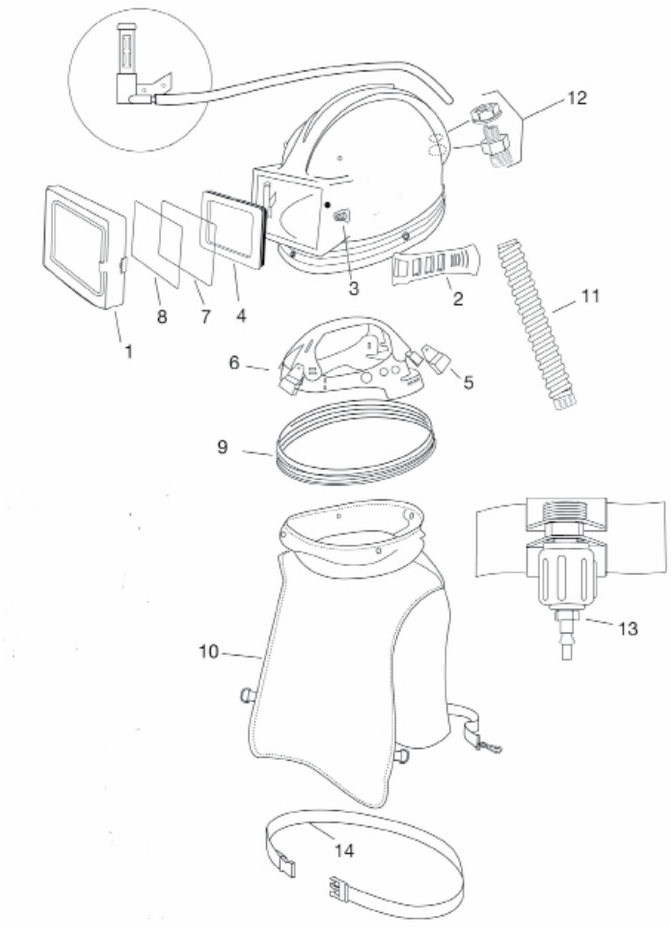

Optional Accessories

Part no.	Description
4320010	Cold Air Tube assembly
4320011	Hot Air Tube assembly

NOVA Abrasive Blasting Helmet

AIRBLAST

The NOVA abrasive blasting helmet is one of the most comfortable blasting helmets available. Lightweight pillow foam padding provides maximum comfort and reduces outside noise to a minimum. A soft breathable inner cape allows perfect airflow while keeping out contaminants. The advanced Air Duct Distribution System creates a constant flow of breathable air, prevents fogging and keeps workers cool. The large, double lens offers optimum vision without irritating side glare. Every feature of the NOVA has been designed, manufactured and tested to ensure workers' safety and comfort under even the most demanding conditions.

The Tear off Lenses system is a unique "FIT AND SAVE" system of pre-folded tabs. This means workers can quickly tear off just one layered lens at a time. Contractors have reported a time saving of over 45 minutes a day per blaster which results in increased productivity.

Toughest & most comfortable
The Nova has been tested and approved to Respiratory Protection standards worldwide including CE and AS/NZS.

ORDERING INFORMATION

Part no.	Description
4700000	NOVA Air Supplied Blasting Helmet, complete with - In-helmet low flow warning device - Breathing air tube assy - Adjustable flow control valve and nylon belt - Nylon cape - CE approved to EN 271

NOVA Parts List

Item	Part no.	Description
01	4700100	Helmet shell (obsolete)
02	4700500	Nylon cape c/w inner bib
03	4702400	Window frame gasket
04	4702500	Visor with hinge and screws
05/06	4702700	Air inlet assy
07	4702800	Visor latch and screws
08	4701100	Polystyrene helmet liner (medium)
09	4701700	Sidewings (medium)
10	4701000	Inner bib
11	4705100	Cape cover band
12	4601600	Adjustable flow control valve
13	4703600	Inner lens (pack of 10)
14	4703800	Outer lens (pack of 50)
15	4703700	Tear-off lens (pack of 50)
17	4601700	Belt with buckles
18	4601400	Breathing air tube

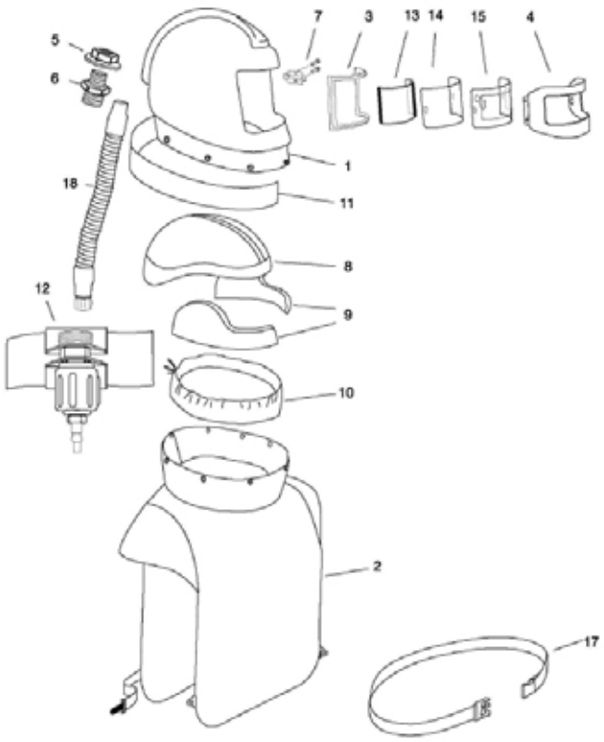

Optional Accessories

Part no.	Description
4320010	Cold Air Tube assembly
4320011	Hot Air Tube assembly

NOVA 1 Abrasive Blasting Helmet

AIRBLAST

The NOVA 1 has been tested and approved to Respiratory Protection standards worldwide including CE and AS/NZS. NOVA 1 has been designed specifically for blasting, by blasting experts.

Comfort
A comfortable respirator system dramatically reduces worker fatigue and increases productivity. Lightweight pillow foam padding provides maximum comfort and reduces outside noise to a minimum. A soft breathable inner cape allows perfect airflow while keeping out contaminants. The advanced Air Duct Distribution System creates a constant flow of breathable air, prevents fogging and keeps workers cool. Every feature of the NOVA 1 has been designed, manufactured and tested to ensure workers' safety and comfort under even the most demanding conditions.

Features and benefits:

- Super tough helmet shell that is UV stabalized and abrasion resistant.
- Adjustable sturdy visor frame to take different lens thicknesses.
- "FIT AND SAVE" Tear off Lenses system.
- Durable nylon cape with comfortable seal around the necks.
- Unique high-strenght visor strap.
- Flexible breathing tube.
- In-helmet low flow warning device.
- CE approved to EN14594.

ORDERING INFORMATION

Part no.	Description
4800000	NOVA 1 Air Supplied Blasting Helmet, complete with nylon cape and constant flow valve
4800110	NOVA 1 Air Supplied Blasting Helmet, complete with nylon cape and adjustable flow control valve

NOVA 1 Parts List

Item	Part no.	Description
01	4800300	Visor kit
02	4601001	Tear-off lens
03	4601000	Outer lens
04	4600900	Inner lens
05	4600600	Window gasket seal
06	4703500	Low flow indicator
07	4800900	Cape cover band
08	4701400	Head dome (sizes S, M & L)
09	4701700	Side wings (sizes S, M & L)
10	4800400	Visor strap
11	4800500	Cleat
12	4800800	Low flow indicator adaptor
13	4800700	Air inlet kit
14	4800600	Support brackets
15	4801300	Breathing tube
16	4703400	Belt
17	4801200	Constant flow valve
	4601600	Adjustable flow control valve
18	4701000	Inner bib
19	4801000	Nylon cape 71 cm
	4801100	Leather cape 71 cm

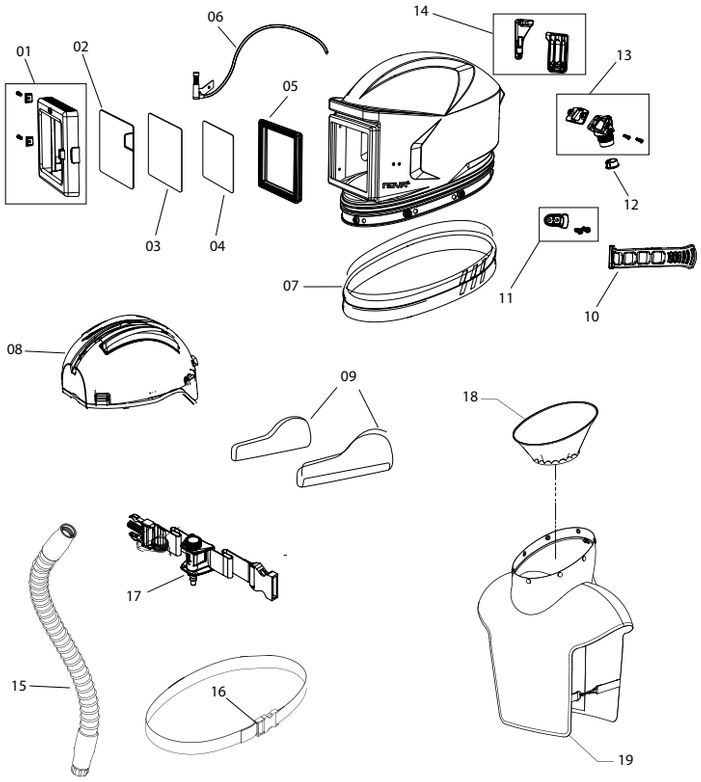

Optional Accessories

Part no.	Description
4320010	Cold Air Tube assembly
4320011	Hot Air Tube assembly

NOVA 3 Advanced Performance Blasting Helmet

AIRBLAST

The ultimate protection and future-proofed performance
The NOVA 3 series respirator combines breakthrough protection technology with advanced comfort and functionality, surpassing even the most rigorous industry standards and the demands of the most quality conscious companies. Designed to optimize safety and productivity, and to minimize worker downtime, the helmet has a host of features that maximize its lifetime value.

Safety above all else
Rigorous safety standards not only protect valued workers, they also maximize efficiency, and maintain companies' hard-earned reputations as suppliers and employers. The NOVA 3 using all conventional safety testing. Meets standards worldwide, including NIOSH, ANSI Z87.1 - 2010+, ANSI Z89.1 - 2012 Type 1 Class C.

Comfortable kit - clear thinking
The NOVA 3's design and engineering distributes the helmet's weight evenly across the head and shoulders for optimum comfort, practicality, and ease of worker movement, reducing fatigue. In addition, a ratchet-adjusted neck pad ensures your head is supported. The ingenious, fully adjustable, internal "Clever Fit Padding" allows helmets to be individually customized. This avoids discomfort and irritation, giving workers a clear head even under the pressures of their work. The padding has a second, vital, purpose. It's positioned to help absorb sound within the helmet, protecting workers' hearing. Padding is easily removed, and fully machine washable, making helmets hygienic and pleasant to wear even in the most extreme temperatures.

The NOVA 3 takes Airblast's goals of protecting workers' safety, optimizing productivity, and minimizing downtime, to a whole new level.

Features and benefits:
- Streamlined air system that direct air to the breathe zone, reducing lens fogging and eliminating head chill.
- Tough, high-pressure moulded helmet shell, manufactured from engineering grade nylon.
- Bellow seal creates a complete barrier to duct and particles.
- Large viewing window that provides optimum downward and peripheral vision.
- "Fit & Save"tear-off lens system that reduces downtime.
- Removable visor for efficient lens replacement.
- Light grey helmet surface reflects heat while the vibrant green visor ensures visibility.
- Field-replaceable air inlet fitting with a unique thread so it can't be installed incorrectly.
- Ratchet adjustable padding system creates secure custom fit.
- Large, glove sized latch that is easy to locate and use.
- Clip on cape seal stops abrasives and dust entering the helmet.
- Cape is securely attached with 8 snap fasteners.
- CE approved tt EN14594.

ORDERING INFORMATION

Part no.	Description
4900000	NOVA 3 Air Supplied Blasting Helmet, complete with nylon cape and constant flow valve
4900110	NOVA 3 Air Supplied Blasting Helmet, complete with nylon cape and adjustable flow control valve

Optional Accessories

Part no.	Description
4320010	Cold Air Tube assembly
4320011	Hot Air Tube assembly
4904000	L4 Blast Light Kit

NOVA 3 Parts List

Part no.	Description
4900800	Hinge lock
4900900	Visor mount kit
4800700	Air inlet kit
4901100	Low flow indicator adaptor
4901200	Padding connectors (left & right)
4800900	Cape cover band

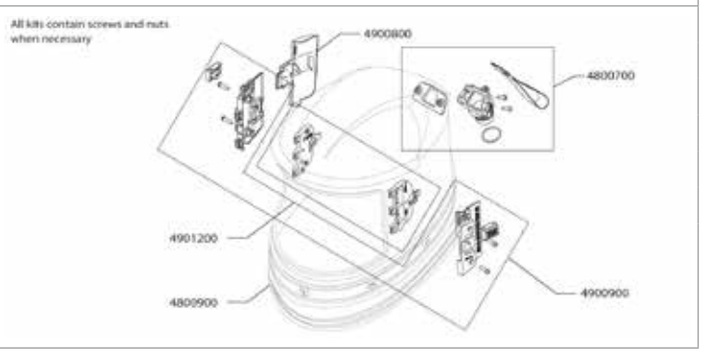

4900100	Inner gasket
4900200	Inner lens (pack of 10)
4900400	Inner lens frame
4900500	Outer lens (pack of 50)
4900600	Tear-off lens (pack of 50)
4900700	Visor kit (incl. visor with hinge pin and latch, hinge lock)

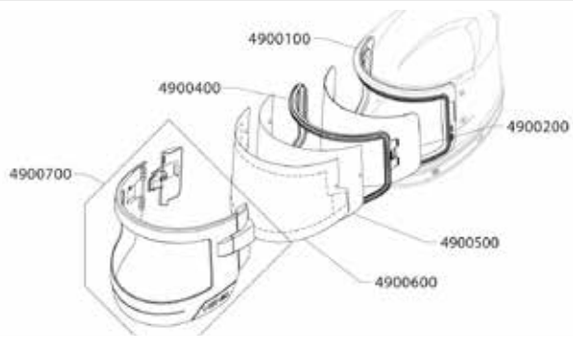

4801300	Breathing tube
4801200	Constant flow valve (fitted on 4900000)
4601600	Adjustable flow control valve (fitted on 4901100)
4320010	Cold air tube
4320011	Hot air tube
4703400	Belt

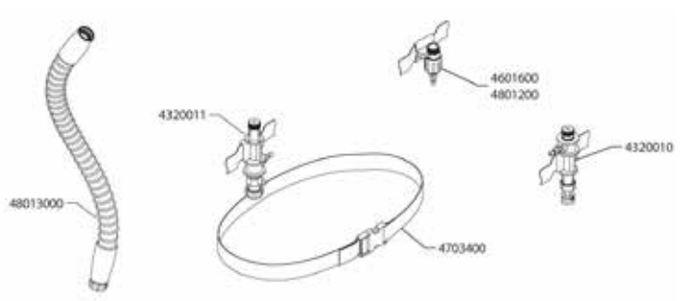

4801000	Nylon cape
4902500	Extra lenght nylon cape
4801100	Leather cape
4902700	Extra lenght leather cape
4902800	Blast jacket - XL
4902900	Blast jacket - XXL

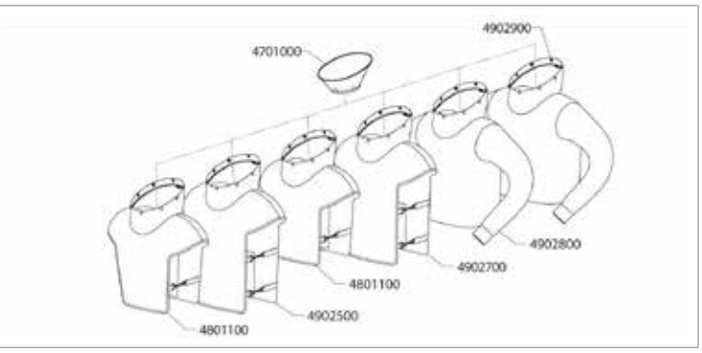

4901300	Side padding frames (left & right)
4001400	Side padding foam & covers (A-10) for large head size
4901500	Side padding foam & covers (A-15) for medium head size
4901600	Side padding foam & covers (A-20) for small head size
4901700	Side padding covers (5 pair)
4901800	Talk side padding covers (5 pair)
4901900	Head liner kit (including clips)
4903000	Adjustable head support

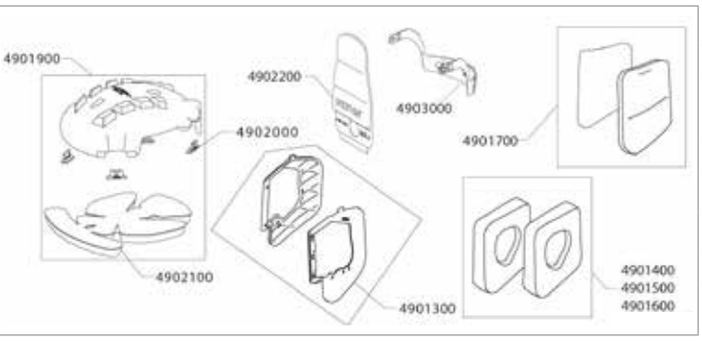

Miniatura Air Supplied Paintspray Hood

AIRBLAST

A light duty airhood using totally clear acetate components providing a perfect vision. The unique visor clamps ensure easy installation of the disposable visors for protection of the main visor against damage and/or splashes. The soft washable face seal ensures a comfortable protective overpressure around the face. An optional cape can be used to protect the upper and back part of the head and neck against dust and liquid particles. Also available as combi version with an integral safety helmet.

Features and benefits:

- Full face clear visor system allows light in and wide field of vision
- Full face protection including chin and brow guard
- Soft, elastic and washable face seal
- Unique system of spring loaded clamps for disposable visors

MINIATURA Sparte Parts

Item	Part no.	Description
1	4043600	Disposable outer lens (100 pcs. per set)
2	4044900	Top shield acetate
3	4044100	Inner lens acetate
4	4043900	Bottom shield acetate
5	4043800	Clamp for disposable window (set of 2)
6	4044800	Face collar
7	4042000	Disposable hood
8	4044700	Adjustable headband with air connection
9	4044200	Hose 22 mm with bayonet connection complete with: - airflow regulator - waist belt - silencer - nipple
10	4044600	Waist belt
11	4044400	Silencer for airflow regulator
12	4019100	Nipple CEJN with ¼" inner thread
13	4044300	Hose 22 mm with bayonet connection
14	4019800	Self-adhesive sweatband

ORDERING INFORMATION

Part no.	Description
4038000	Miniatura air supplied paintspray hood, complete with: - Hood assembly - Breathing tube - Adjustable air flow control incl. sound silencer - 1 spare face collar - 10 disposable outer lenses - 2 spare self-adhesive sweatband - 3 disposable hoods

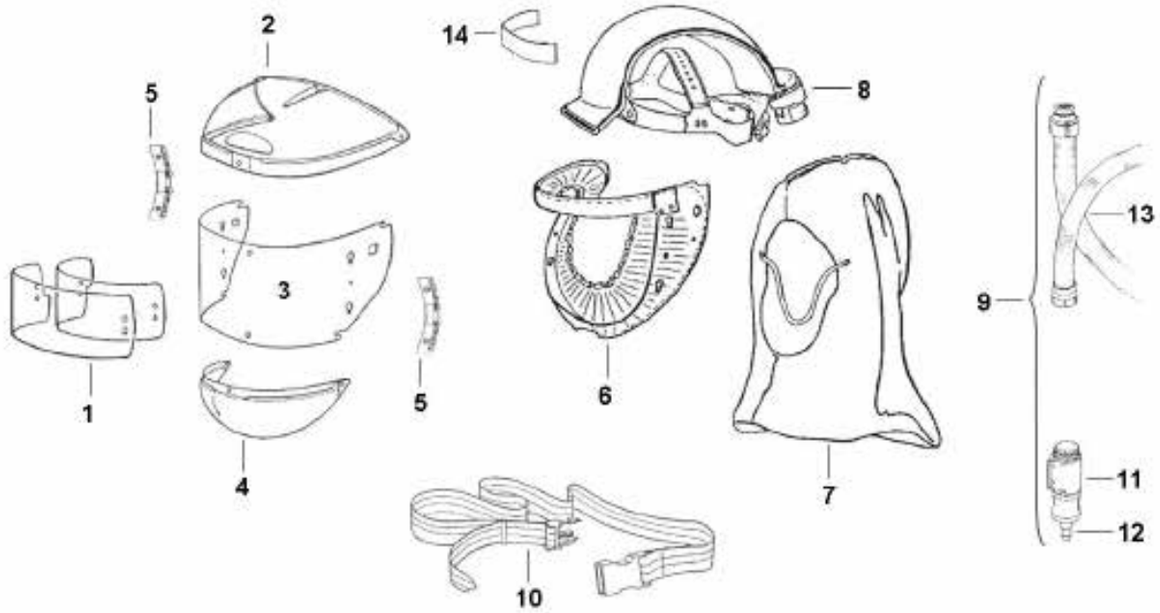

Helmet Air Filter for 1 - 6 users

Airblast Helmet Air Filter (HAF) is designed to remove oil mist, water vapour and particulates down to 0.5 microns from breathing grade compressed air. The Airblast Helmet Air Filter meets OSHA regulation 1910.94 (6) (ii), requiring a trap and carbon filter be installed and regularly maintained to remove objectionable odours, as well as water, oil mist and other particulates. The Airblast HAF is supplied incl. pressure reducing valve to reduce the pressure to the requirements of supplied air respirators, providing that the inlet pressure does not exceed 8,6 bar (125 PSI).

Advantages

- One filter suitable for multiple respirators, up to 6 users
- Polypropylene filter cartridge casing eliminates corrosion hazard
- Filter cartridge lasts up to 3 months (based on 40 hours week)
- Filters can be floor or wall mounted

ORDERING INFORMATION

Part no.	Description
4300000	HAF-I Helmet Air Filter for 1-2 users
4320000	HAF-II Helmet Air Filter for 1-6 users

HAF Parts List

Item	Part no.	Description
01	4301000	3/8” Tee - brass
02	4302000	3/8” Pressure regulator
03	4303000	Pressure gauge
04	4304000	3/8” Pressure regulator – high flow (optional)
05	4305000	Pressure gauge – high flow (optional)
06	4306000	Pressure relief valve
07	4307000	Filter cover for 1 or 2 users HAF
08	4308000	Filter cover for 1-6 users HAF (optional)
09	4309000	Outlet manifold for 1-6 users (optional)
10	4310000	Filter housing
11	4311000	O-ring (set of 2)
12	4312000	Bolt (set of 4)
13	4313000	Base / Wall mount
14	2175200	CCC-38/I Quick coupling 1 or 2 users
15	2174200	CCC-38/O Quick coupling for 1-6 users
16	2225500	Hex nipple 1”
17	4250401	Filter cartridge for HAF
18	2170400	KAG-10 Quick coupling 1”outer thread
19	4316000	Drain valve - brass

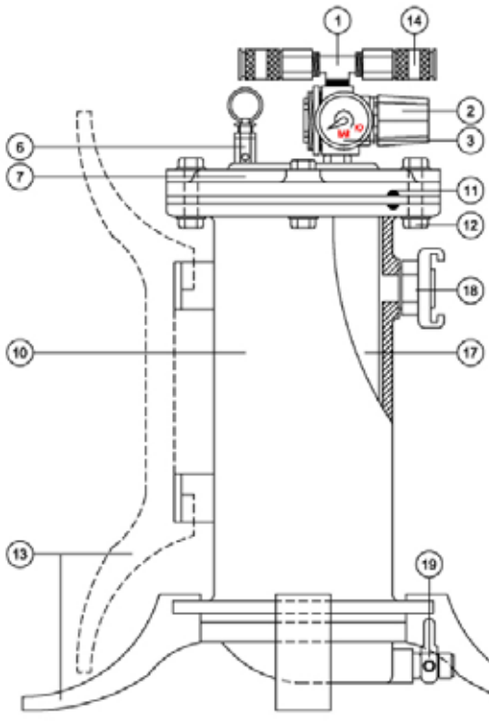

High flow regulator

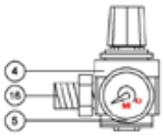

6-outlet top view

6-outlet side view

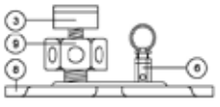

Delivery includes

HAF Assembly, pressure regulator, pressure relief valve, bracket for stand or wall mount, drain valve and filter cartridge.

Helmet Air Hose - Optional

Part no.	Description
2527000	Helmet Air Hose 3/8” - 9 mm ID (9 x 16), 10 bar working pressure
2527400	Helmet Air Hose 3/8” - 9 mm ID (9 x 16), 10 bar working pressure, coupled 5 meters
2527500	Helmet Air Hose 3/8” - 9 mm ID (9 x 16), 10 bar working pressure, coupled 20 meters
2527700	Helmet Air Hose 3/8” - 9 mm ID (9 x 16), 10 bar working pressure, coupled 40 meters

Air Filter Cartridges

The AFC-B100 and AFC-C100 Air Filter Cartridges will fit into many brands of Air Filter Units available on the market. AFC-B100 fits into Airblast/Bullard and AFC-C100 fits into Clemco Helmet Air Filters.

Increased Filter Life
Both Air Filter Cartridges can offer increased filter life with the use of Quality filtration materials. Greater material surface area provides increased absorption of oils, water and odours. The natural fibre felt swabs very efficiently absorbs oil from the air stream allowing the compressed air to flow through to the further stages of moisture and odour removal.

Quality Materials
The highest quality filtration materials which are manufactured to exacting standards have been chosen for the above Air Filter Cartridges to ensure the most efficient and effective filtration.

No Corrosion
The AFC-B100 and AFC-C100 Air Filter Cartridges are injection moulded polypropylene which will not corrode or collapse like the tin alternatives.

!WARNING! These filter cartridges does not remove carbon monoxide (CO). Carbon Monoxide alarms must be used at all times.

AFC-B100 AFC-C100

ORDERING INFORMATION	
Part no.	**Description**
4250401	AFC-B100
4097802	AFC-C100

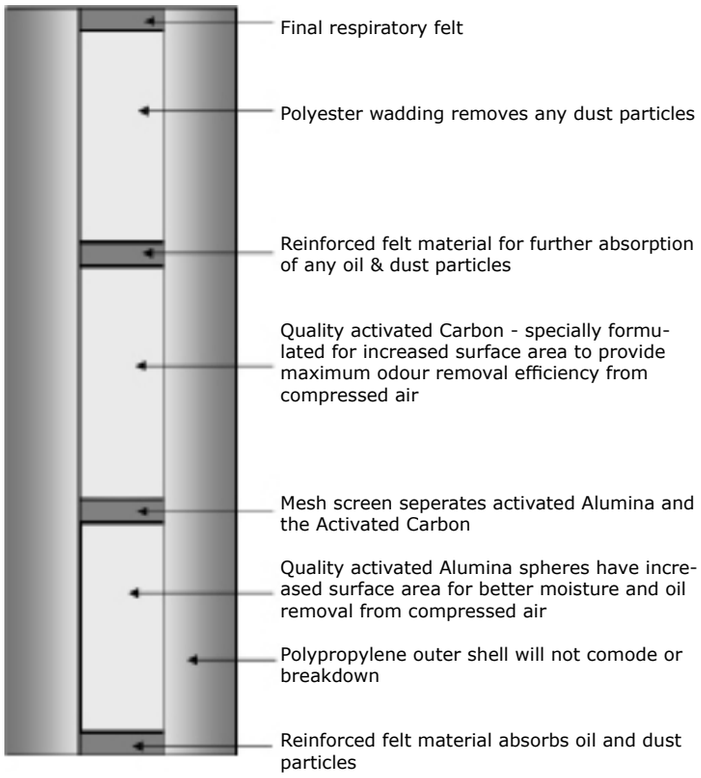

PX4 Air Belt NOVA 1 & NOVA 3

The PX4 Air Belt assembly consists of a motor/blower unit, high efficiency filter, waist belt and lithium ion battery pack. The motor/blower unit draws ambient air through its high efficiency filter and supplies air to the headgear through a breathing tube.

As you know, many of the demanding jobs that require respiratory protection also require portability. How can you ensure your employees are safe, comfortable and productive in these demanding environments? The PX4 Air Belt is a robust and versatile air supply unit that provides clean breathing air to the NOVA 1 & NOVA 3 blast helmets. Whether you're welding, grinding or blasting, the PX4 is the respiratory solution for you.

The PX4 optimizes user safety, comfort and portability. It is CE certified and exceeds the requirements of AS/NZS, so the user can enjoy the safety of clean breathing air without the restriction of attached airlines, giving them complete flexibility to move around as their job requires.

Breathe easier
The ultra-efficient multi-speed fan draws air through the air inlet scallops, then through an optional spark arrestor which eliminates any sparks, the air then continues through the pre filter which removes large particles to enhance the life of the cartridge. It is then circulated through the high efficiency cartridge providing you with clean, breathable air.

ORDERING INFORMATION		
Item	**Part no.**	**Description**
	4320030	PX4 Air Belt, complete

PX4 AIR BELT - Parts List		
Item	**Part no.**	**Description**
01	4320035	Door cover
02	4320040	Pre-filter (pack of 10)
03	4320041	Spark arrestor
04	4320036	Filter door
05	4320031	High efficiency filter
06	4320034	Door latch kit
07	4320032	Fan housing
	4320033	Fan housing - low flow
08	4320051	Battery
09	4320043	Belt loops kit
10	4320044	Belt support (pair)
11	4320038	2" Belt & nylon buckle
	4320039	2" Nomex® belt and acetyl buckle
12	4320037	Air breathing tube for NOVA 1 & NOVA 3
13	4320042	Flow meter
14	4320050	Battery charger
15	4320049	24 Volt power supply with power cord
16	4320045	Battery charger and power supply kit - EU
	4320046	Battery charger and power supply kit - UK
	4320047	Battery charger and power supply kit - AU
	4320048	Battery charger and power supply kit - US

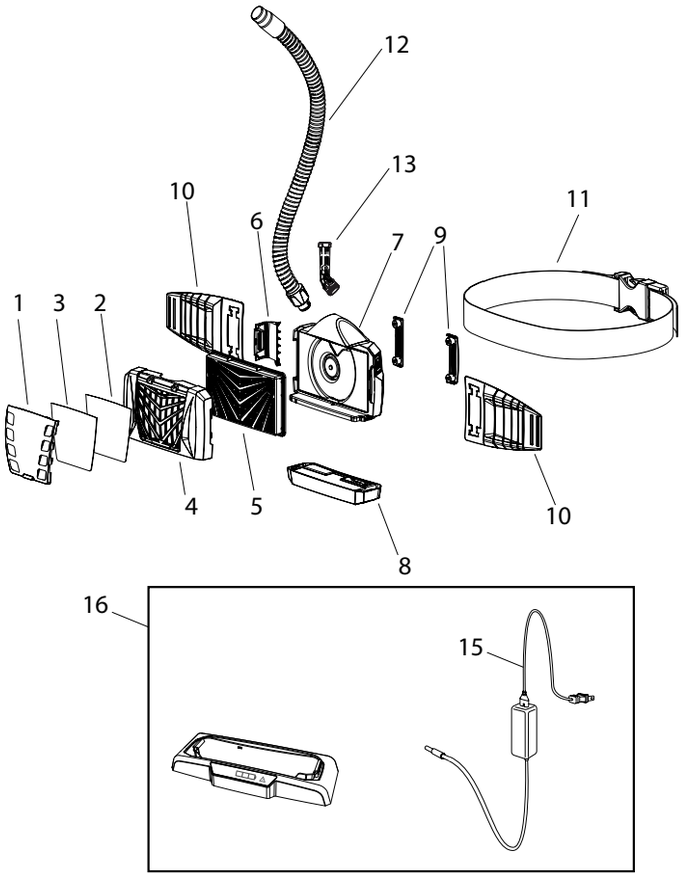

Climate Control Tubes

The Airblast Climate Control Tube for cold air cools compressed breathing air coming into respirators by as much as 18 °C). The Airblast Climate Control Tube for hot air warms compressed breathing air coming into respirators by as much as 17 °C). Both tubes helps maximize worker comfort and increase productivity in cold or hot climates.

The Airblast Climate Control Tubes are fitted with an airflow regulator that allows the user to adjust the outgoing air temperature to suit their requirements. All components of the tube are replaceable and the unit can be disassembled for cleaning and maintenance.

The Airblast Climate Control Tubes are manufactured from non toxic engineering plastic which is extremely robust and ideal for the rigors of the workplace.

- All parts are easily removable for maintenance and cleaning
- Tough engineering plastic designed for harsh conditions
- Regulator to control air temperature and airflow
- Strong webbed belt

Both models fits to breathing tube of Astro, NOVA, NOVA 1 and NOVA 3 abrasive blasting helmets.

ORDERING INFORMATION

CLIMATE CONTROL TUBES

Part no.	Description
4320010	Cold Air Tube assembly
4320011	Hot Air Tube assembly
4045000	Adaptor to connect to other brand helmets

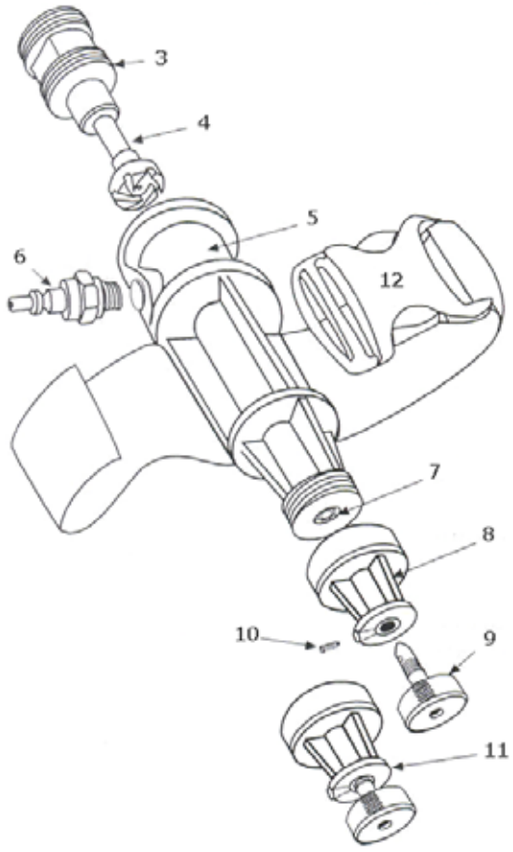

CLIMATE CONTROL TUBES - Parts List

Item	Part no.	Description
3	4320012	Top spinner cap
4	4320013	Air spinner
5	4320014	Body
6	4320015	Quick disconnect tail ¼”
7	4320016	Breaker
8	4320017	Regulator body
9	4320018	Spindle & knob
10	4320019	Locking screw
11	4320020	Regulator assembly
12	4703400	Belt

Vortex Air Conditioner

The VORTEX Air Conditioner is designed to keep workers wearing air purifying systems comfortable in both hot or cold working conditions using only one device.

The VORTEX is using breathable compressed air to reach temperature ranges up to 20°C cooler or warmer than the inlet temperature.

The VORTEX Air Conditioner is suitable for use in combination with the Extreme blasting helmet.

Specifications

Materials	: Aluminium
Weight	: 400 gram
Working pressure	: 4,5 bar
Performance	: 20°C difference cold or warm
Minimum airflow	: 160 l/min. (at 4,5 bar dynamic pressure)
Maximum airflow	: 350 l/min. (at 4,5 bar dynamic pressure)
Inlet airflow	: 900 l/min max.
Min. working temp.	: -10°C
Max. working temp.	: +60°C
Noise level at 5,5 bar	: 90 dB
Max. hose length	: 50 mtr.

ORDERING INFORMATION

VORTEX AIR CONDITIONER

Part no.	Description
4046100	Vortex Air Conditioning System

GX4 Gas Detection Monitor

As you know, compressed breathing air can create a deadly environment. Do you have an intelligent gas monitor which can give you complete confidence in the air you and your employees are breathing? The GX4 is your solution. With the ability to detect up to 4 gases and with traceability the GX4 gives you a perfect solution.

Gases like Carbon Monoxide are invisible to all the human senses, yet are commonly found in industrial premises' worldwide. While low level carbon monoxide exposure may not be immediately fatal to employee's, ongoing contact with the gas at low levels has a cumulative effect, causing serious illness and health concerns for employee's long term. With symptoms often confused with the flu, headaches or tiredness, it's a serious problem which is often too easily ignored.

APPLICATIONS:

- Spray painting
- Blasting and confined space application
- Chemical handling
- And many more!

FEATURES:

- Illuminated information display for viewing real time data.
- 103 decibel alarm. This can also be used in conjunction with auxiliary warning devices such as strobe lights.
- Monitor up to four gases simultaneously.
- Strong purpose built case, made from from reinforced polypropylene it is designed for the harshest of conditions.
- Cartridges can be easily replaced.
- Sturdy mounting bracket for attaching the GX4 to walls or HAF Helmet Air Filter.
- Universal power options for running the GX4 or charging it's internal battery.
- If you are working remotely to the GX4 Gas Monitor you can connect a strobe light or strobe light and alarm.
- Complete quick and easy calibration checks with no set points required.
- A range of pre-calibrated gas sensors are available including CO, O2 and CO2 and all have a 2 year shelf life.
- Connect from your laptop, tablet, phone or a network to view real time data, download logs and much more.
- Optional robust carry case

GX4 GAS MONITOR

Part no.	Description
4420000	GX4 Gas Detection Monitor with mounting brackets including: - 1 x Carbon Monoxide Sensor Cartridge - 1 x EU Power Cord - 1 x Air hose to connect the unit to the filter
4421000	GX4 Gas Detection Monitor with mounting brackets including: - 1 x Carbon Monoxide Sensor Cartridge - 1 x UK Power Cord (for use in the Middle East) - 1 x Air hose to connect the unit to the filter
4422000	GX4 Gas Detection Monitor with mounting brackets including: - 1 x Carbon Monoxide Sensor Cartridge - 1 x USA Power Cord - 1 x Air hose to connect the unit to the filter
4423000	GX4 Gas Detection Monitor with mounting brackets including: - 1 x Carbon Monoxide Sensor Cartridge - 1 x AU/NZ Power Cord - 1 x Air hose to connect the unit to the filter

GX4 GAS MONITOR - Parts List

Item	Part no.	Description
01	4420010	GX4 Gas Detection Monitor
02	4420011	Mounting brackets (pair)
03	4420012	Wall mounting bracket
04	4420013	Carbon monoxide sensor 10ppm
	4420014	Carbon monoxide sensor 5ppm
05	4420015	Blank cartridge
06	4420016	Air supply hose & one touch connector
07	4420017	M5 Inlet filter, sintered brass
08	4420018	AC Adaptor and power cord - EU
	4420019	AC Adaptor and power cord - UK
	4420020	AC Adaptor and power cord - USA
	4420021	AC Adaptor and power cord - AU/NZ
09	4420022	Power cord - EU
	4420023	Power cord - UK
	4420024	Power cord - USA
	4420025	Power cord - AU/NZ
10	4420026	Battery clips with 1.8 mtr cable
11	4420027	AUX Cable, bare 15 mtr
12	4420028	AUX Strobe light with 15 mtr cable
	4420029	AUX Strobe light w/alarm,15 mtr cable
	4420030	AUX Field install jack
	4420031	Power field install jack
13	4420032	Heavy duty field case
14	4420033	Calibration adaptor
15	4420034	Calibration regulator kit 1.5 slpm, incl. item 14
16	4420035	34L Zero air and 20ppm CO cylinders
	4420036	Grade D calibration kit (CO2,CO,O2,N2)
17	4420037	Manifold tube

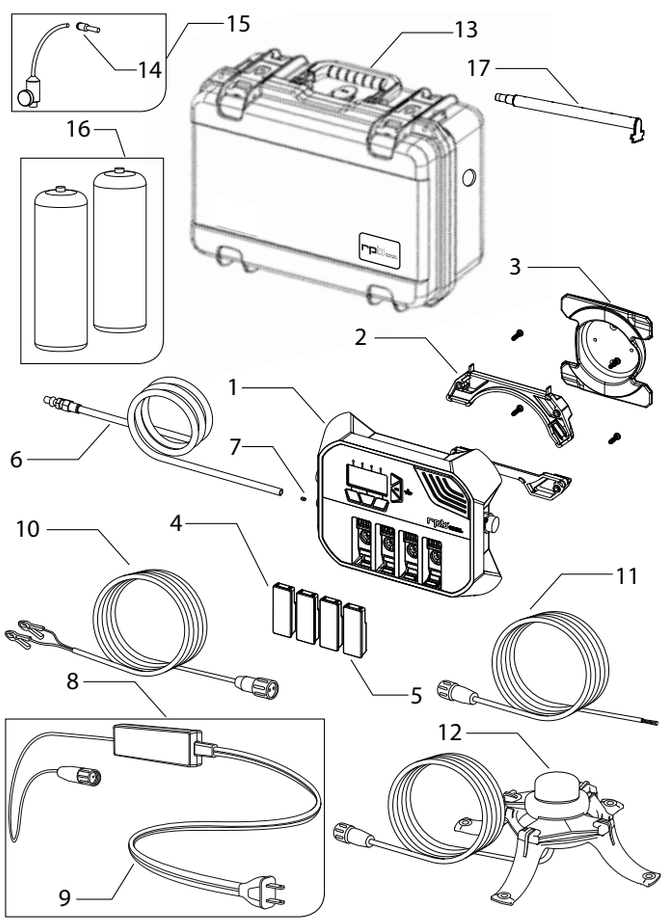

Blast Lights (LED) 12V / 24V

Airblast Blast Lights are developed to meet the demand for an easy to use, lightweight, low voltage abrasive blasting light.

Features:

- Highly concentrated output of halogen/LED light, the unit fully illuminates the area on which blasting is taking place.
- Safe to use – works with 12 or 24 volt power supply and there's no glass to break - a cheap, strong and easily replaceable plastic lens is used at the front of the unit.
- No light spill or dazzle – by using a special bulb and tube fitting, the light is concentrated only on the work area and all back dazzle is eliminated.
- Free to work – because the unit is clamped directly on the blast nozzle fitting, the operator has both hands free to operate the blast equipment.
- The blast light can be used alongside all existing deadman handles.

To back up the light, a suitable fully rubber housed transformer is available to connect to a 220 volt 50 hz line, giving a 12 volt output to upto 4 separate sockets for up to 4 lights. Other executions are available on request.

ORDERING INFORMATION	
BLAST LIGHT ABKR	
5010800	ABKR-12/20 Blast Light 12 Volt/20 Watt incl. 12 Volt halo bulb, 5 m cable (2 x 0.75 mm²) and CEE-Connector (Male).
5010100	ABKR-24/20 Blast Light 24 Volt/20 Watt incl. 24 Volt halo bulb, 5 m cable (2 x 0.75 mm²) and CEE-Connector (Male).
5016000	ABKR-12/4 Blast Light 12 Volt/4 Watt incl. 12 Volt LED bulb, 5 m cable (2 x 0.75 mm²) and CEE-Connector (Male).

SPARE PARTS

Item	Part no.	Description
1	5010700	Halogen bulb 12 Volt / 20 Watt
	5010200	Halogen bulb 24 Volt / 20 Watt
	5016500	LED bulb 12 Volt / 4 Watt
2	5010300	Lens
3	5010400	CEE Connector, 2 poles, 16A - Male
4	5009500	Cable (2 x 0.75 mm²), black rubber, RWPK H05RN-F
	5010500	Cable (2 x 1.50 mm²), black rubber, RWPK H05RN-F
	5012000	Cable (2 x 1.50 mm²), neoprene, NWPK H07RN-F
5	5012100	Fitting
6	5012200	Spring clip
7	5012300	Cable connector
8	5012400	Rubber plug
9	5012500	Clamp
	5012600	Bolt (not shown)
	5010600	CEE Connector, 2 poles, 16A - Female (not shown)

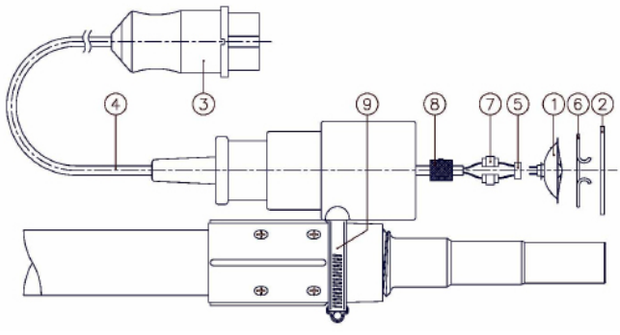

ORDERING INFORMATION	
BLAST LIGHT HALO	
5011000	HALO-24/100 BLAST LIGHT 24 Volt / 100 Watt with ON/OFF-Switch, Full Rubber housing with reflector. Incl. halogen bulb, 5 m cable (2 x 1.5 mm²) and CEE Connector (M) * Also available in 12 Volt and 42 Volt execution.
5020000	HALO-24/100 BLAST LIGHT 24 Volt / 100 Watt. Full Rubber housing with reflector. Incl. halogen bulb, 5 m cable (2 x 1.5 mm²) and CEE Connector (M).

SPARE PARTS

Item	Part no.	Description
1	5011100	Bulb 24 Volt / 100 Watt
2	5010400	CEE Connector 24V / 16A (M)
3	5012000	Cable (2 x 1.50 mm²), neoprene, NWPK H07RN-F
	5013000	Cable (2 x 2.50 mm²), neoprene, NWPK H07RN-F
4	5012700	Rubber plug
	5010600	CEE Connector, 2 poles, 16A - Female (not shown)

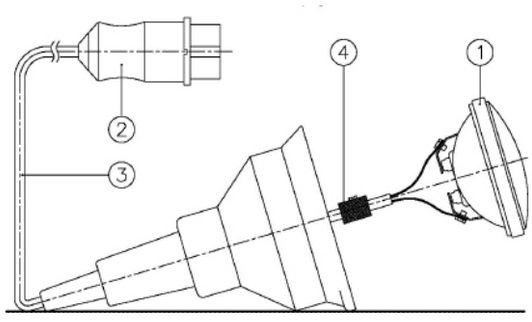

TRANSFORMERS FOR 24V BLAST AND FLOOD LIGHTS. Incl. 3 m (2 x 1.5 mm2) Grounded cable and 24 Volt 16A CEE Output (Female) - Full rubber housing. Thermal Safeguard against overload.	
5011500	TRANS MINI - 220V / 24V 120VA - 1 x 24 Volt / 16A CEE output (F)
5011600	TRANS-MIDI - 220V / 24V 225VA - 2 x 24 Volt / 16A CEE-output (F)
5030100	TRANS I/1 - 220V / 24V 500VA - 1 x 24 Volt / 16A CEE output (F)
5030200	TRANS I/2 - 220V / 24V 500VA - 2 x 24 Volt / 16A CEE output (F)
5030300	TRANS I/3 - 220V / 24V 500VA - 3 x 24 Volt / 16A CEE output (F)
5030400	TRANS I/4 - 220V / 24V 500VA - 4 x 24 Volt / 16A CEE output (F)
5030500	TRANS II/2 - 220V / 24V 1000VA - 2 x 24 Volt / 16A CEE output (F)
5030600	TRANS II/3 - 220V / 24V 1000VA - 3 x 24 Volt / 16A CEE output (F)
5030700	TRANS II/4 - 220V / 24V 1000VA - 4 x 24 Volt / 16A CEE output (F)

L4 Blast Light Kit NOVA 3

As you know, blasting in the dark is awkward and dangerous. How can you ensure your workers have enough light to clearly see what they are doing? The L4 Lighting System is your solution, as it provides a steady, highly concentrated output of light to your field of vision.

The L4 Lighting System was developed to overcome the global need for light to assist blasters in tanks and other confined spaces where there is hardly light. It mounts securely to the top of the Nova 3 Blast Helmet, providing light wherever the operator looks.

FEATURES:

- Manufactured with durable, long lasting materials.
- Mounts directly to the Nova 3 with no modification required.
- Long lasting Li-ion battery provides up to 12 hours on a single charge.
- Batteries recharge in 3-4 hours.
- Light-weight battery pack that mounts on your belt.
- Field-replaceable outer lens.
- Efficient, high powered LEDs producing up to 500 lumens of concentrated light output.
- Comes with 5 pre-set brightness settings.

L4 BLAST LIGHT KIT		
Item	**Part no.**	**Description**
	4904000	L4 Blast Light Kit NOVA 3

L4 BLAST LIGHT KIT - Parts List		
Item	**Part no.**	**Description**
01	4904100	Light w/strap & mount unit (includes 4904200)
02	4904200	Light cable
03	4904300	Light battery pack and belt
04	4904400	Cable/hose clips
05	4904500	Light mounting clips
06	4904600	Light outer lens (pack 10 pcs)
07	4904700	Battery charger
08	4420022	Power cord - EU
	4420023	Power cord - UK
	4420024	Power cord - USA
	4420025	Power cord - AU/NZ

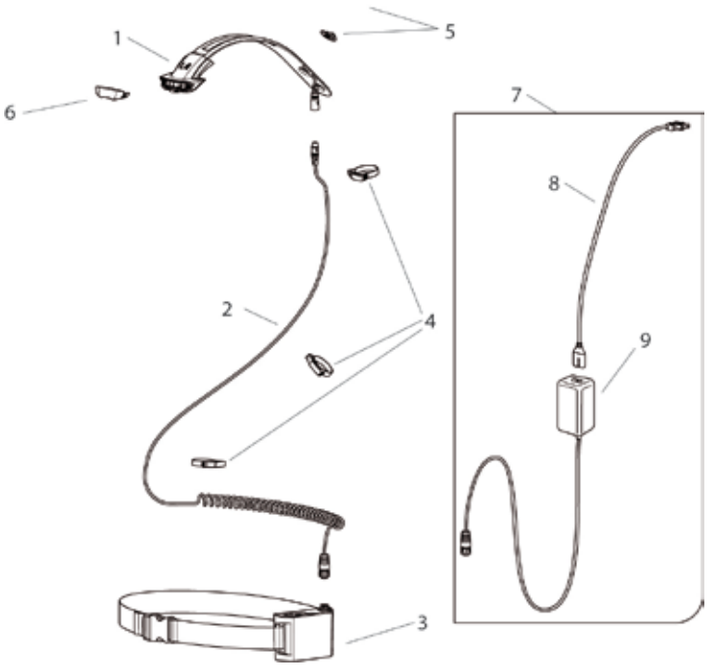

Blasting & Painting Clothing

Overall
The Airblast Blasting Overall has been designed to enhance worker comfort and protect the worker from abrasive rebound.

The heavy duty blasting overalls are fitted with leather reinforced fronts of the sleeves & legs and have leather elbow pieces and a leather neck collar. The front can be closed by a double flap with velcro. The sleeves and legs can be closed with Velcro straps.

- CE certified
- Leather protection pieces
- Double velcro closures
- Comfortable fit

Leather blouse & gloves
Leather blasting blouse & gloves for optimum protection.

Cotton clothing
Cotton comfort blouse, trouser and hood to provide protection from dust and spray.

ORDERING INFORMATION

LEATHER / COTTON OVERALLS

Part no.	Description
4053700	LO-50, small
4053600	LO-52, medium
4053500	LO-54, large
4053400	LO-56, extra large
4053300	LO-58, extra extra large
4053200	LO-60, extra extra extra large

LEATHER GLOVES

Part no.	Description
4047000	G-L/90 (pair)

LEATHER BLOUSE

Part no.	Description
4054100	Leather blouse - heavy duty

COTTON CLOTHING

Part no.	Description
4054000	Cotton blouse - heavy duty
4055000	Cotton trousers - heavy duty
4053300	Cotton comfort hood

Cool Vest

AIRBLAST

Airblast's revolutionary Cool Vest technology offers unparalleled cooling power. Unlike ice or gel packs that steadily lose their effectiveness. Airblast Cool Vests will remain at a CONSTANT 13° C / 55° F. for hours of cooling. The Cool Vest can help reduce the chance of heat-related illnesses that sometimes occur in today's difficult work environments.
Airblast Cool Vest: lightweight, quickly recharged, no condensation, and constant temperature. Uses a simple, interchangeable, front/back cool pack system that provides continuous cooling to the worker's upper body. The vests are easily adjustable for maximum comfort and flexibility.

Airblast Cool Vest provides:

- Worker Comfort
- Heat Stress Avoidance
- Improved Productivity by 22%
- Engineered to maintain a constant 13° C / 55° F
- Over 2 hours of cooling duration at 32° C / 90°F
- Ergonomic design and fully adjustable for practical in-the-field ease of use
- Recharge in 20 minutes

Airblast Cool Vest

The ACV 2 provides cooling for approximately 2½ hours. The period of cooling depends solely on work activity and environmental conditions. Vest material is flame retardant. Fits medium to large sizes. Weight: 2.9 kg. (6.5 lbs.)

ACV Replacement Packs

No waiting. No down time. Keep extra cool packs ready for instant on-site changes. The cooling agent within the pack is a safe, non-toxic, and non-carcinogenic formulation. Cool packs may be re-energized thousands of times providing hours of safe, controlled body temperature management. Placed in a cooler of ice water, the cool packs will fully recharge in approximately 20 minutes. However, ice water is not necessary as the phase change technology actually begins recharging the packs whenever they are placed in an environment that is cooler than 13° C / 55° F.

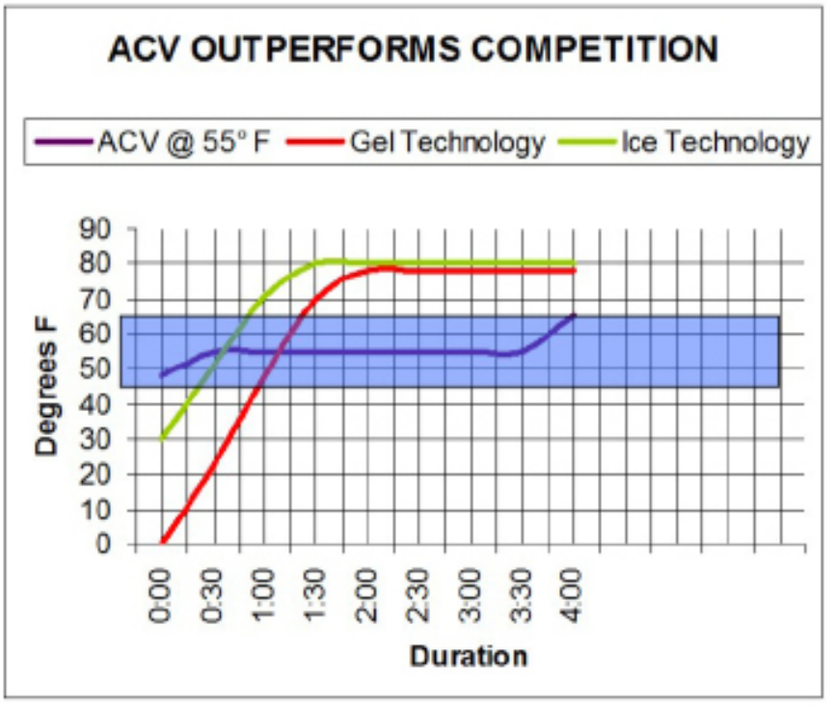

Section 5 - Dust Free

Product	Page
Aquastorm abrasive wet blasting system	112
Aquablast wetblast attachment	113
WIN Water injection nozzles	114
Educt-O-Matic portable dust free vacuum blaster	115
AB-1020 EP Dust free vacuum blast machine	118
AB-1030 EP/PN Dust free vacuum blast machine	119
AB-1050 EP/PN Dust free vacuum blast machine	120
AB-1060 EP/PN Dust free vacuum blast machine	122
AB-1070 EP/PN Dust free vacuum blast machine	124
AB-61 Vacuum injection blast cabinet	126
AB-90 Vacuum injection blast cabinet	127
ABDI-1000 Vacuum injection blast cabinet	128
ABDI-1300 Vacuum injection blast cabinet	129
ABDI-1500 Vacuum injection blast cabinet	130
ABD-1000 Pressure blast cabinet	131
ABD-1300 Pressure blast cabinet	132
ABD-1500 Pressure blast cabinet	133
Blastrooms	134
UHP High Pressure Waterjetting	136

Aquastorm - Wet Abrasive Blasting System

The Aquastorm system allows blasting at very low and very high pressure to accomodate changes in the surface being cleaned / blasted. In contrast to other blasting procedures this is fully adjustable allowing the operator to change from heavy blasting to gentle cleaning as the surface dictates.
The Aquastorm system handles industrial maintenance applications, such as cleaning or removing layers of concrete, removal of paint by layers, total coating removal to specified degree of cleanliness (white metal etc.) or removal of oxidized layers from steel, with ease. The system is also very effective in sensitive applications such as the petrochemical industry, where sparks or static electricity are prohibitive (by coating each particle of the blast medium with water, the system effectively eliminates this concern).
Another positive effect on ecology and economy, is a 95% dust reduction when using AquaStorm systems. This allows minimized or no containment, and no dust collectors or negative pressure. Further it allows complete and easy access around the entire structure being cleaned / blasted. There is also no need for air supplied hoods, meaning greater operator comfort, as well as public perception of the work being performed.
The additional advantage of giving the operator full control of the machine at the blast nozzle by remote control allows for less laborers.
The Aquastorm system is available in a fully pneumatic execution as well as an electric/ pneumatic version.

Advantages:

- Very low and very high blast pressures possible meaning any substrate can be blasted
- High coverage
- Consumption of blasting media reduced by up to 60% and very low consumption of water
- Minimized or no containment required
- Long service life of all parts subject to wear
- Dry blasting media not required (saves storage costs)
- Multiple use of blasting media is possible
- Can blast up to 250 m (800 ft.) in height
- Rust inhibitor injection available

Delivery includes:

- the complete blasting unit
- ATSDX 6/50 nozzle
- 20 mtr of 32 x 8 blast hose
- remote control system
- deadman handle
- 20 mtr. twin hose
- operator's manual
- export packaging

Other configurations available upon request.

The Aquastorm can be used is combination with a High Water Pressure (HWP) unit. This system is called the Turbojet system which is a high performance system.

TECHNICAL SPECIFICATIONS AQUASTORM	
	AquaStorm 200
Blast media capacity (ltr.)	200
Blast hose connection (mm)	32
Empty weight (kgs.)	185
Dimensions in cm. (WxLxH)	890 x 910 x 1380
Control pressure (bar)	2 - 10
Required air input pressure (min. - max. in bar)	4,0 - 8,0
Electric connection (Volt/Watt)	12/1,2
Air connection (mm)	38
Consumtion of blast media incl. ± 25% of water (min. - max. in ltr./min.)	1,0 - 8,0

*) All mentioned values are averages and may vary due to surface conditions, machine use and experiences of the operator.

Aquablast Wetblast Attachment

The Aquablast Wetblast Attachment can be fitted on the nozzle outlet and provides a water "envelope" around the air/media flow which controls the dust levels.

The Aquablast Wetblast Attachment is used in combination with standard tap water or water pumps.

This simple tool fits to most nozzles (not included). The attachment is delivered complete with stop and regulator valve.

ORDERING INFORMATION	
Part no.	**Description**
5031000	AQUABLAST - WETBLAST ATTACHMENT, COMPLETE Includes water jacket, shut-off valve, flexible hose and petcock
5031100	AQUABLAST - WETBLAST ATTACHMENT, BARE Exclusive of petcock and hose

SPARE PARTS AQUABLAST WETBLAST ATTACHMENT

Item	Part no.	Description	Qty required
1	5031500	Water jacket	1
2	8229152	Elbow coupling 1/4" x 8 mm	2
3	5031700	Water hose 6 x 1 mm L-300 mm	1
4	5031600	Coupling 1/4" x 8 mm	1
5	1152000	Ball valve 1/4"	1
6	2178900	Hose barb incl. nut	1
7	5031800	Bolt	3

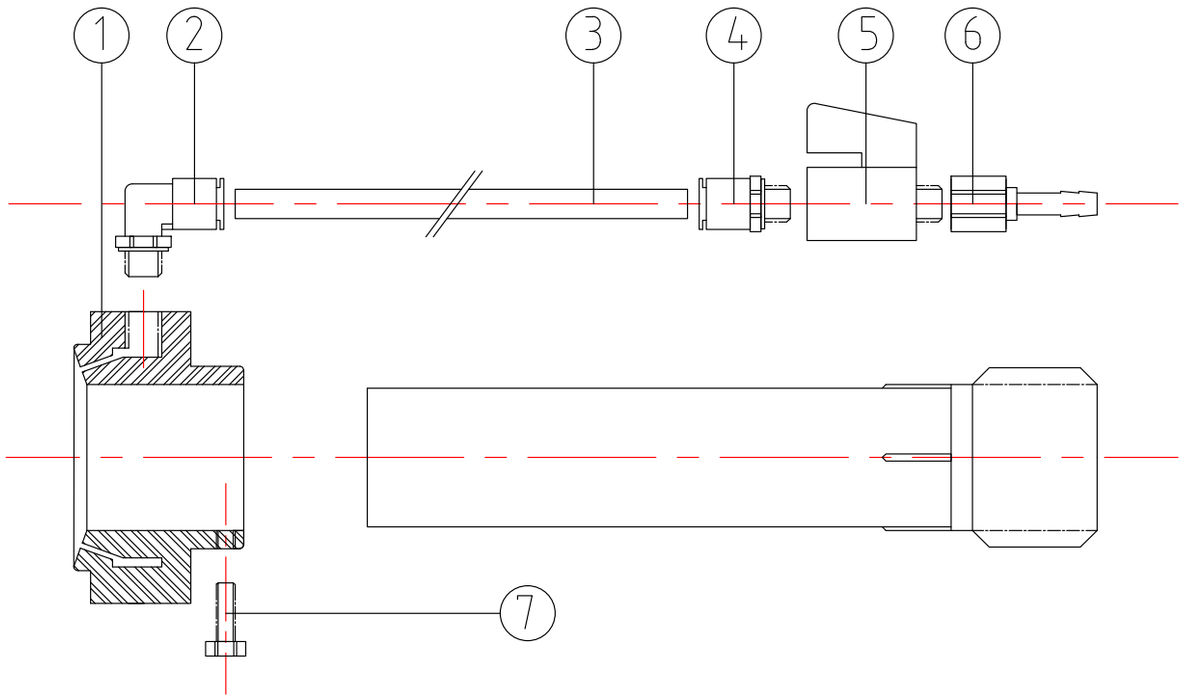

WIN Water Injection Nozzles

Airblast high velocity venturi style nozzles have been designed specifically to give maximum blast cleaning rates, uniform abrasive distribution and efficiency over an extensive operating life. Through the venturi principle the air and abrasive mixture is accelerated as it exits the nozzle. Venturi nozzles increase productivity and reduce abrasive consumption with approximately 40% as compared to straight bore nozzles. Airblast offers a full selection of nozzles with different orifice diameters, sizes, and insert / jacket materials.

WIN Nozzle

The WIN (Water Injection Nozzle) system is a simple, cost effective solution for high production, wet abrasive blasting that can be used with your existing pressure blast equipment. The system can be used with water from a tap or with rust inhibitors supplied through any simple pump. No special equipment is required. The WIN system offers the highest performance possible in wet abrasive blasting technology.

ORDERING INFORMATION

Part no.	Description	Orifice	Lenght	Inlet
2460000	WIN-4/50 Water Injection Nozzle	6,4 mm	149 mm	25 mm
2461000	WIN-5/50 Water Injection Nozzle	7,9 mm	158 mm	25 mm
2462000	WIN-6/50 Water Injection Nozzle	9,5 mm	171 mm	25 mm
2463000	WIN-8/50 Water Injection Nozzle	12 mm	227 mm	25 mm

Educ-O-Matic Portable Dustfree Vacuum Blaster

The Educ-O-Matic is a light-weight, portable abrasive blasting tool with an integral abrasive recovery system. During blasting, abrasive is continually recycled, while dust and other debris are collected in a slip-on dust bag. Interchangeable adapter boots for level surfaces, corners, etc. fit over the swivel blast head to assure efficient recovery on any surface.

Advantages

- Constant cleaning of internal surface
- Cleaning with the highest speed possible
- Saving on time and abrasives
- Adjustable setup for the best cleaning speed
- Easy handling and no down-time
- Blast in only one drive through
- Adjustable for all kind of abrasive
- Very rigged construction
- Suitable for all kind of pipe internal diameters
- Semi-automatic, one operator can handle more machines or do other work

ORDERING INFORMATION

EDUCT-O-MATIC ASSEMBLY

Part no.	Description
3091000	Educt-O-Matic includes attachment set with • round brush • angle brush • master adaptor • 2" (50 mm) discharge hose • plywood carry case

EDUCT-O-MATIC SEPARATE ATTACHMENTS

Item	Part no.	Description
A.	3092000	AE-2090 Edge attachment
B.	3093000	AE-2091 Serrated attachment
	3093100	AE-2091-1 Round brush (not shown)
C.	3094000	AE-2092 Master adaptor
D.	3095000	AE-2093 Angle attachment
	3095100	AE-2093-1 Angle brush (not shown)
E.	3096000	AE-2094 Flat lip attachment
F.	3097000	AE-2095 Blank end

EDUCT-O-MATIC SPARE PARTS		
Item	**Part no.**	**Description**
01.	3098000	AE-2001 Blast head
02.	3099000	AE-2002 Standard adaptor
03.	3100000	AE-2004 ⅜” (9 mm) nozzle – TC
04.	3102000	AE-2006 Blast jet
05.	3103000	AE-2007 Jet gasket
06.	3103100	AE-2008Valve assembly
07.	3104000	AE-2005 Thumb screw
08.	3105000	AE-2011 Blast head nipple ⅜”x4¼” (9 x 108mm)
09.	3106000	AE-2012 Swivel connector
10.	3107000	AE-2013 O-ring
11.	3108000	AE-2014 Main body
12.	3109000	AE-2016 Abrasive hose
13.	3110000	AE-2018 Thumb screw
14.	3110500	AE-2019 Baffle washer
15.	3111000	AE-2020 Hose clamp
16.	3112000	AE-2021 Air hose
17.	3112500	AE-2021-1 Spring for air hose
18.	3113000	AE-2022 Suction jet
19.	3114000	AE-2068-1 Sreen assembly
20.	3115000	AE-2023 Baffle (plastic only)
21.	3344000	AE-2027 Locking device
22.	3116000	AE-2068 Screen
23.	3117000	AE-2030 Screen gasket
24.	3118000	AE-2069 Abrasive container w/lock and hose
25.	3119000	AE-2035 Dust bag
26.	3120000	AE-2032-1 Ejector pipe
27.	3120100	AE-2032-1 Dust bag holder
28.	3121000	AE-2042 Valve body
29.	3122000	AE-2036 O-ring

EDUCT-O-MATIC SPARE PARTS		
Item	**Part no.**	**Description**
30.	3122100	AE-2038 Screw
31.	3122200	AE-2039 Washer
32.	3122800	AE-2043 Handle pin
33.	3122900	AE-2044 Snap ring
34.	3123000	AE-2045 Valve bushing
35.	3124000	AE-2046 Valve bushing gasket
36.	3125000	AE-2047 O-ring (neoprene)
37.	3126000	AE-2048 Washer
38.	3127000	AE-2049 Snap ring
39.	3128000	AE-2050 Primary valve spring
40.	3129000	AE-2051 Valve stem
41.	3130000	AE-2052 Primary valve seat
42.	3131000	AE-2053 Guide washer brass
43.	3132000	AE-2054 Hex nut
44.	3133000	AE-2055 Washer brass
45.	3134000	AE-2056 Second valve spring
46.	3135000	AE-2057 Second valve seat
47.	3137000	AE-2059 Washer - brass
48.	3138000	AE-2060 Snap ring
49.	3140000	AE-2061 Pipe nipple
50.	3141000	AE-2083 Rubber tube
51.	3142000	AE-2065 Valve handle assembly
52.	3143000	AE-2070 Swivel nut assembly
53.	2162900	KIG-12 Coupling with F thread
54.	2164000	CQG-0 Rubber gasket
55.	2168400	SKG-19 Coupling w/hose barb 3/4”
56.	2168200	SKG-13 Coupling w/hose barb 1/2”
57.	2172300	HS-32 Hose clamp
58.	3147000	AE-2120 Plywood carrycase

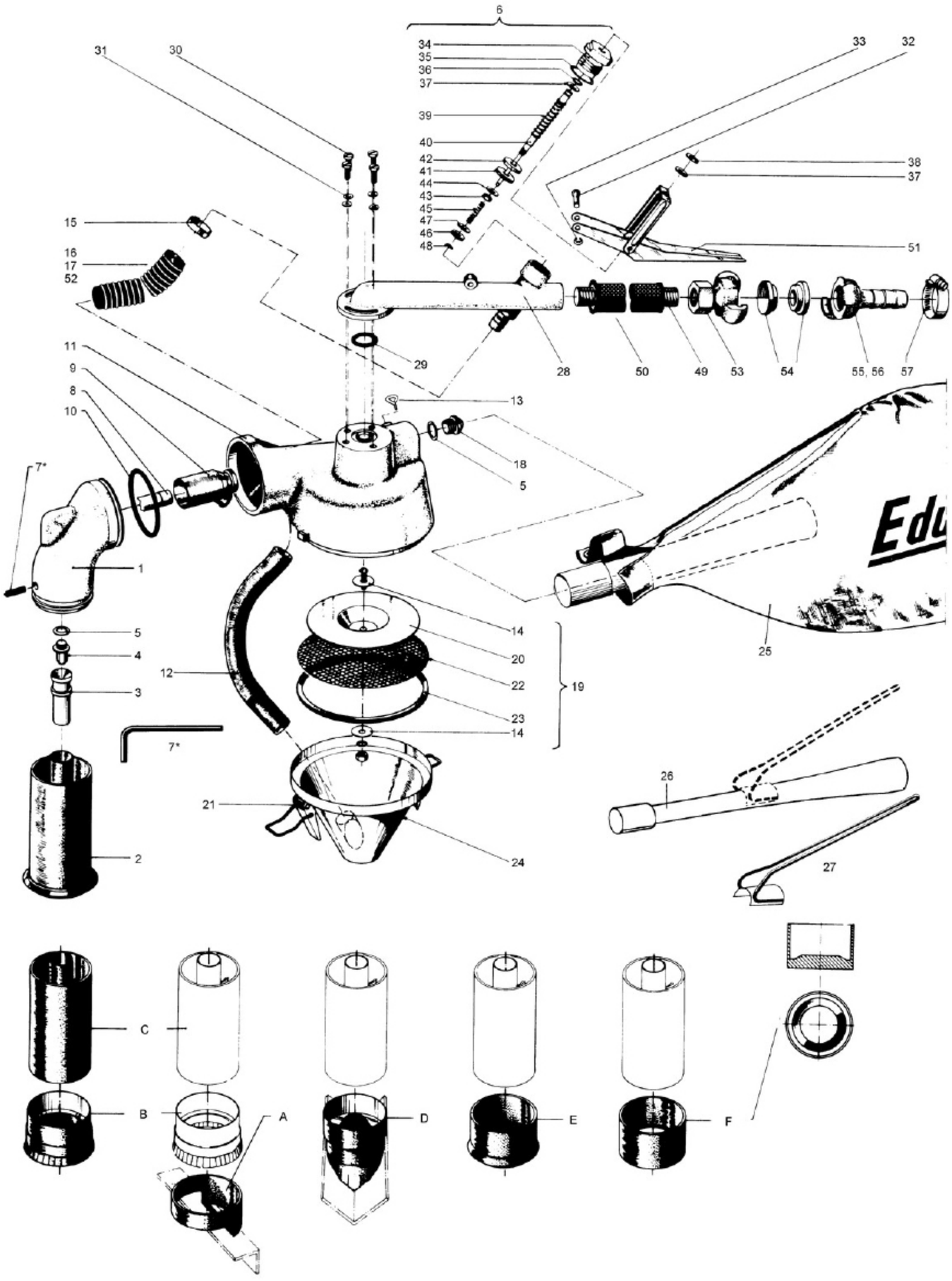
6
34
35
36
37
39
40
42
41
44
43
45
47
46
48
31
30
33
32
38
37
51
15
16
17
52
29
28
50
49
53
54
55, 56
57
11
9
8
10
13
18
5
7*
1
5
4
3
12
7*
2
14
20
22
23
14
19
21
24
25
26
27
C
B
A
D
E
F

AB-1020 EP Dust Free Vacuum Blast Machine

AIRBLAST

This compact electric-pneumatic driven injection vacuum blasting machine with an average blasting pattern of 16 mm width, is excellent to apply for blast cleaning weld seams, spot blasting of smaller areas, inspection and repair of engines and machinery overhaul, bodywork on vehicles.

Features

- "Stand alone" unit includes automatic dust extraction and abrasive recycling system
- Quickly interchangeable blast head fittings to blast different surface shapes
- Fully pneumatic
- Allows blasting from 3 – 6 bar)
- Maximum hose length of 5 meters
- Easy injection blast principle

Benefits

- Totally dust free environmentally friendly blasting
- Other job site operations can be conducted close to the blasting area
- Zero dust contamination on the job site
- Many common shapes can be blasted with ease
- Low operation cost due to the use of recyclable abrasive
- Flexible and versatile

Applications:

- Cleaning of paint work
- Removal of floor coatings
- Roughening of various surfaces
- Cleaning of welds
- Decorative blasting of glass
- Cleaning and roughening of marble, granite and stone

TECHNICAL SPECIFICATIONS AB1020	
	Electrical pneumatic
Blast media capacity (ltr.)	9
Max. hose length (mtr.)	5
Empty weight (kgs.)	25
Dimensions in cm. (W x L x H)	41 x 53 x 93
Max. working pressure (bar)	6
Max. air consumption (ltr/min.)	480
Electric power (Watt)	1000
Electric current (Volts)	230
Average widht of blast pattern (mm)	15-17
Max. abrasive size in mm.	1.0 (18 mesh)

AB1030 EP/PN Dust Free Vacuum Blast Machine

All the Airblast vacuum blasting machines are designed to provide closed-system blasting by making the blasthead a small "containment structure". This speeds the job along, whether you are doing large-scale cleaning, or just spot blasting.

The removed coating and corrosion, plus the spent abrasives, are all deposited into a closed waste compartment. The air is filtered before it's exhausted. So the entire operation is virtually dustfree and safe for your crew and the environment.

The 1030 model is the most portable model of the range of Airblast Vacuum Blasting units. It is very well suited for cleaning small areas, and for weld preparation.

Rather than using a pressure blast vessel, the blast media is "lifted" from the machine by a vacuum generated at the blasthead, blasted onto the surface being cleaned and then vacuumed back into the unit for dust removal and reuse.

The recovery vacuum generator for this model is available in a pneumatic as well as an electric execution. The electric powered model is used in situations where the available compressed air source is limited.

Applications:
- Cleaning of paint work
- Removal of floor coatings
- Roughening of various surfaces
- Cleaning of welds
- Decorative blasting of glass
- Cleaning and roughening of marble, granite and stone

5

TECHNICAL SPECIFICATIONS AB1030		
	Electrical pneumatic	**Pneumatic**
Blast media capacity (ltr.)	17	17
Max. hose length (mtr.)	5	5
Empty weight (kgs.)	34	34
Dimensions in cm. (W x L x H)	41 x 53 x 114	41 x 53 x 132
Max. working pressure (bar)	6	7
Recommended compressor size (ltr/min.)	1.000	2.300
Electric power (Watt)	1.700	-
Electric current (Volts)	220/240	-
Average widht of blast pattern (mm)	20-22	20-22
Max. abrasive size in mm.	1 (18 mesh)	1 (18 mesh)

Vacuum blasting machine AB1030 EP/PN (suction system) - Delivery includes:

- the complete blasting unit
- 5 m blast hose set consisting of a blast gun with 10mm BC blast nozzle
- grit supply hose
- 2" vacuum hose
- air connector
- 5 meter of electricity cable incl. plug (230V) for the EP version
- 3 standard brushes (brush flat, brush 90° inner corner and brush 90° outer corner)
- operator's manual
- export packaging

Machine options and accessories:
*) Pneumatic filter cleaning system. Beside the standard flat and corner brushes are special shaped brushes available.

AB-1050 EP/PN Dust Free Vacuum Blast Machine

AIRBLAST

This fully pneumatically driven injection blasting machine with an average blasting pattern of 28-32 mm width is similar as the electric-pneumatic version, often used for blasting the heavier weld seams, grit blasting axes and cylinder shafts, larger machine parts before inspection and repair, shipbuilding, railway industry and maintenance, engines and engine overhaul, bodywork of vehicles and trailers, container overhaul, storage tank and vessel construction. Due to the absence of necessity of an electric power supply, this machine is ideally suited for mobile applications on location 'in the field' and minor repair work on larger projects and removing graffiti. Available in fully pneumatic and electro-pneumatic version.

Features

- "Stand alone" unit includes automatic dust extraction and abrasive recycling system
- Quickly interchangeable blast head fittings to blast different surface shapes
- Fully pneumatic
- Allows blasting from low to high pressure (1 – 7 bar)
- Maximum hose length of 5 meters
- Can be incorporated into an automatic on-line blasting process
- Easy injection blast principle

Benefits

- Totally dust free environmentally friendly blasting
- Other job site operations can be conducted close to the blasting area
- Zero dust contamination on the job site
- Many common shapes can be blasted with ease
- Low operation cost due to the use of recyclable abrasive
- Flexible and versatile

	Abrasive type	Obtained surface quality	Average production capacity per hour
STEEL SURFACE			
Corroded steel, shot primer, light coatings and millscale	Aluminium oxide, garnet	SA 2½ (SP10)	1,2 - 1,5 m²/hr.
Heavily corroded steel, heavy coatings, chlorinated rubber coating	Aluminium oxide, garnet	SA 2½ (SP10)	0,5 - 1,0 m²/hr.
Steel weld seams	Aluminium oxide, garnet	SA 2½ (SP10)	50 - 60 mtr./hr.
Stainless steel weld seams (decolourisation)	Glass beads	Polishing	40 - 50 mtr./hr.
CONCRETE SURFACE			
Bricks, natural stones. Cement film, light coating or graffiti removal	Aluminium oxide, olivine sand	Cleaning	1,5 - 2 m²/hr.
Removal of heavy coatings	Aluminium oxide, garnet	Removal of paint layer	0,5 - 2 m²/hr.
Cleaning without damaging	Walnut shell, olivine sand	Cleaning	1,0 - 2 m²/hr.

*) All mentioned values are averages and may vary due to surface conditions, type of abrasive, abrasive quality, machine use and experiences of the operator. Do not use non recyclable abrasive or sand.

AB-1050 EP/PN Dust Free Vacuum Blast Machine

TECHNICAL SPECIFICATIONS AB-1050		
	Electrical pneumatic	**Pneumatic**
Blast media capacity (ltr.)	28	28
Max. hose length (mtr.)	5	5
Empty weight (kgs.)	70	68
Dimensions in Mm. (W x L x H)	530 x 610 x 1320	530 x 610 x 1400
Max. working pressure (bar)	7	7
Electric power (kW)	3.000	-
Electric current (Volts)	230	-
Recommended compressor size (ltr/min.)	1.600	3.500
Average width blast pattern (mm)	28/32	28/32
Max. abrasive size in mm.	1.2	1.2

Vacuum blasting machine AB-1050

Delivery includes:

- the complete blasting unit
- 5 m blast hose set consisting of a blast gun with 12 mm BC blast nozzle
- grit supply hose
- 2” vacuum hose
- air connector
- 3 standard brushes (brush flat, brush 90° inner corner and brush 90° outer corner)
- operator’s manual in English
- export packaging

Machine options and accessories:
*) Pneumatic filter cleaning system. Beside the standard flat and corner brushes there are special shaped brushes available.

AB-1060 EP/PN Dust Free Vacuum Blast Machine

This model "pressure fed" vacuum blasting machine is available in various versions, which makes it able to choose the best suitable machine for the blasting job.

The AB-1060's design is mostly used for vacuum blasting with light and medium weight abrasives such as aluminium oxide, garnet, olivine sand, glass beads and plastics. With an average blasting pattern width of 50 mm, this machine is often used in the following applications; tank construction, heavy steel constructions, yacht and ship construction, weld cleaning and finishing, on- and offshore pipeline industry, thermal metallizing coating processes, rubber roll cladding, aircraft industry, maintenance at refineries, granite and natural stone works, concrete construction and overhaul, road markings and linings, polyester and glass fibre industry, rolling and colander industry (plastics, paper). Available in fully pneumatic and electro-pneumatic version.

Features

- "Stand alone" unit includes automatic dust extraction and abrasive recycling system
- Quickly interchangeable blast head fittings to blast different surface shapes
- Fully pneumatic or electric/pneumatic
- Blasting from low to middle pressure (1,5 – 5,5 bar)
- Can be incorporated into an automatic online blasting process

Benefits

- Totally dust free environmentally friendly blasting
- Other job site operations can be conducted close to the blasting area
- Zero dust contamination on the job site
- Many common shapes can be blasted with ease
- Low operation cost due to the use of steel abrasive
- Flexible and versatile

Surface	Abrasive type	Abrasive size	Obtained surface quality	Average production capacity per hour
Steel: millscale, coatings and or corrosion	Alu-oxyde Chilled iron Steel grit	0.8-1.2 mm. G17 / G24	SA 2½ (SP10)	4 - 6 m^2
Weld seams: steel	Alu-oxyde Chilled iron Steel grit	0.8-1.2 mm. G17 / G24	SA 2½ (SP10)	70 - 80 mtr/hr.

*) All mentioned values are averages and may vary due to surface conditions, abrasive quality, machine use and experiences of the operator.

AB-1060 EP/PN Dust Free Vacuum Blast Machine

TECHNICAL SPECIFICATIONS AB-1060		
	Pneumatic Single Chamber (PN)	**Electric/Pneumatic Single Chamber (EP)**
Blast media capacity (ltr.)	40	40
Max. hose length (mtr.)	30	10
Empty weight (kgs.)	525	560
Dimensions in mm. (LxWxH)	1570 x 750 x 1860	1570 x 750 x 1860
Working pressure (bar)	1.5 - 5.5	1.5 - 5.5
Recommended compressor size (ltr/min.)	3.500 - 7.000	3.500
Electric power (Kw)	-	4.000
Electric current (V)	-	400
Average width blast pattern (mm)	50 - 75	50 - 75
Max. abrasive size (mm)	1.5	1.5
Recommended abrasives	Alu-Oxyde	Alu-Oxyde

Vacuum blasting machine AB-1060

Delivery includes:

- 10m (EP), 15m (PN) hose set consisting of a blast hose, abrasive recovery hose, a double line control hose with trigger and all necessary hose connectors.
- Hardened aluminium blast head, a blast head inner tube flat, a blast head inner tube 90 and a 6,4 mm boron carbide nozzle.
- Set of standard brushes (brush flat, brush 90° inner corner and brush 90° outer corner).
- Adjustable venturi and pressure gauge for air driven version
- Operator's manual in English
- Warranty

Options and accessoiries:

- Extension blast hose set of 10m (PN)
- Extension blast hose set of 15m (PN)
- Extension blast hose set of 20m (PN)
- Large blast head incl. Borium Carbide Nozzle
- Floor trolley for large blast head

AB-1070 EP/PN Dust Free Vacuum Blast Machine

The AB-1070 vacuum blast machine is an environmentally friendly dust free blasting solution which is easy to use, versatile and powerful. The use of steel abrasive provides cost effective, efficient and powerful blasting as well as close control of the surface preparation. Easily inter-changeable blast head fittings allow a variety of surfaces to be blasted including: flat, inside & outside corners, small & large diameter pipes etc. Additional accessories are available for specific applications such as to blast large horizontal surfaces or the edges of steel plates. As the process is safe and dust free other production processes can be carried out close to the blasting operation.

Features

- "Stand alone" unit includes automatic dust extraction and abrasive recycling system
- Quickly interchangeable blast head fittings to blast different surface shapes
- Fully pneumatic
- Allows blasting from low to high pressure (1 – 8 bar)
- Maximum hose length of 35 meters
- Can be incorporated into an automatic online blasting process

Benefits

- Totally dust free environmentally friendly blasting
- Other job site operations can be conducted close to the blasting area
- Zero dust contamination on the job site
- Many common shapes can be blasted with ease
- Low operation cost due to the use of steel abrasive
- Flexible and versatile

Surface	Abrasive type	Abrasive size	Obtained surface quality	Average production capacity per hour
Steel: millscale, coatings and or corrosion	Alu-oxyde Chilled iron Steel grit	0.8-1.2 mm. G17 / G24	SA 2½ (SP10)	4 - 9 m^2
Steel: heavy corrosion	Alu-oxyde Chilled iron Steel grit	0.8-1.2 mm. G17 / G24	SA 2½ (SP10)	3 - 8 m^2
Steel: blasted with shot primer	Alu-oxyde Chilled iron Steel grit	0.8-1.2 mm. G17 / G24	SA 2½ (SP10)	5 - 9 m^2
Steel: Chlorinated rubber coating	Alu-oxyde Chilled iron Steel grit	0.8-1.2 mm. G17 / G24	SA 2½ (SP10)	1.5 - 5 m^2
Weld seams: steel	Alu-oxyde Chilled iron Steel grit	0.8-1.2 mm. G17 / G24	SA 2½ (SP10)	80 - 120 mtr/hr. (50 mm. width)

*) All mentioned values are averages and may vary due to surface conditions, abrasive quality, machine use and experiences of the operator.

AB-1070 EP/PN Dust Free Vacuum Blast Machine

TECHNICAL SPECIFICATIONS AB-1070		
	Pneumatic Single Chamber (PN)	**Electric/Pneumatic Single Chamber (EP)**
Blast media capacity (ltr.)	40	40
Max. hose length (mtr.)	45-60	15
Empty weight (kgs.)	525	590
Dimensions in mm. (WxLxH)	1570 x 750 x 1860	1570 x 750 x 1860
Max. working pressure (bar)	8	8
Electric power (Kw)		9.200
Electric current (V)		400
Recommended compressor size (ltr/min.)	3.500 - 10.000	3.500 - 5.000
Average width blast pattern (mm)	50 - 75	50 - 75
Max. abrasive size (mm)	1.5	1.5

Vacuum blasting machine AB-1070

Delivery includes:

- 15 m hose set consisting of a blast hose, abrasive recovery hose, a double line control hose with trigger and all necessary hose connectors.
- Hardened aluminium blast head, a blast head inner tube flat, a blast head inner tube 90 and a 6,4 mm boron carbide nozzle.
- Set of standard brushes (brush flat, brush 90° inner corner and brush 90° outer corner).
- Adjustable venturi and pressure gauge for air driven version
- Operator's manual in English
- Warranty

Options and accessoiries:

- Extension blast hose set of 10m
- Extension blast hose set of 15m
- Extension blast hose set of 20m
- Large blast head incl. Borium Carbide Nozzle
- Floor trolley for large blast head

AB-61 Vacuum Injection Blast Cabinet

The Airblast vacuum injection blast cabinets are designed for rust removal, cleaning, slagging, frosting, chipping and polishing. The unit is especially designed for manual blasting of all sorts of smaller items. The AB-61 is equipped with a continuous circulation system for the abrasives and a built-in high efficiency filter system.

Dimensions			
	Cabinet	**Working area**	**Door**
Height	2190 mm	980 mm	726 mm
Width	1200 mm	1180 mm	586 mm
Depth	1010 mm	750 mm	

The system is ready to operate and comes complete with:

- 2 flexible rubber openings to operate the nozzle.
- 1 pair of rubber gloves.
- 1 exchangeable window.
- 1 perforated working area.
- 1 nozzle holder with 8 mm boron carbide nozzle, complete with all necessary hoses and connections.
- 1 pneumatical foot switch to operate the nozzle.
- 1 lighting element with special protection cover and 2x18 Watt neon lamps.
- 1 safety switch for exhauster motor.
- 1 adjustable air pressure reducing valve with manometers.
- 1 rubber protection inside backwall.
- 1 door safety switch with magnetic valve.

Operating principle

The abrasive falls into the hopper via the work grating in the working area of the blast cabinet. At the lower end of the hopper, the abrasive falls into the mixing tube, from where it is sucked up through the abrasive hose. The suction force can be adjusted by means of the regulating slide valve. The abrasive hose with abrasive leads to the blast nozzle. A compressed air hose is also connected to the nozzle. The foot pedal is used to apply pressure to the compressed air hose. This creates a vacuum in the abrasive hose, causing the abrasive to be drawn in from the hopper and creating a flow of abrasive. The blasting pressure can be adjusted by means of the pressure reducing valve of the compressed air supply.

AB-90 Vacuum Injection Blast Cabinet

The Airblast Vacuum Injection Cabinets are designed for rust removal, cleaning, slagging, frosting, chipping and polishing. The unit is especially designed for manual blasting of all sorts of smaller items. The AB-90 is equipped with a continuous circulation system for the abrasives and a built-in high efficiency filter system.

Dimensions			
	Cabinet	**Working area**	**Door**
Height	1880 mm	600 mm	600 mm
Width	1010 mm	1000 mm	1000 mm
Depth	850 mm	600 mm	

The system is ready to operate and comes complete with:
- 1 frontdoor with safety control switch
- 2 flexible rubber openings to operate the nozzle.
- 1 pair of rubber gloves.
- 1 exchangeable window.
- 1 perforated working area.
- 1 nozzle holder with 6 mm boron carbide nozzle, complete with all necessary hoses and connections.
- 1 pneumatical foot switch to operate the nozzle.
- 1 lighting element with special protection cover and 2x18 Watt neon lamps.
- 1 safety switch for exhauster motor and lighting.
- 1 air pressure reducing valve with build-in filter and manometer.

Operating principle
The abrasive falls into the hopper via the work grating in the working area of the blast cabinet. At the lower end of the hopper, the abrasive falls into the mixing tube, from where it is sucked up through the abrasive hose. The suction force can be adjusted by means of the regulating slide valve. The abrasive hose with abrasive leads to the blast nozzle. A compressed air hose is also connected to the nozzle. The foot pedal is used to apply pressure to the compressed air hose. This creates a vacuum in the abrasive hose, causing the abrasive to be drawn in from the hopper and creating a flow of abrasive. The blasting pressure can be adjusted by means of the pressure reducing valve of the compressed air supply.

ABDI-1000 Vacuum Injection Blast Cabinet

The Airblast vacuum injection blast cabinets are designed for rust removal, cleaning, slagging, frosting, chipping and polishing. The unit is especially designed for manual blasting of all sorts of smaller items.

The cabinet consists of a working chamber with underneath a blast medium funnel. A dust filter with pre-separator is part of the cabinet.
The working chamber is covered with 3 mm rubber on the walls and the door. Attached to the blast cabin, is a pre-separator to separate the heavy parts from the air flow before the air flow enters the dust filter.
Underneath the funnel, the injector is attached.

Dimensions			
	Cabinet	**Working area**	**Door**
Height	2490 mm	1000 mm	850 mm
Width	1050 mm	1000 mm	700 mm
Depth	1700 mm	1000 mm	

Delivery includes:

- revolving door with safety control switch.
- lighting 4x18 Watt.
- 3 perforated grids in working area.
- 1 window exchangeable.
- 1 window securit.
- 2 flexible rubber openings.
- build-in controlpanel with main switch, control safety switches for exhauster and lighting.
- 1 nozzle holder with 8 mm Borium Carbid nozzle.
- blast hose which is guided through the roof of the machine.
- reducing valve (0 - 10 bar) operated by a pilot valve with manometer on the front of the machine.
- pneumatic footpedal.

Operating principle

The abrasive falls into the hopper via the work grating in the working area of the blast cabinet. At the lower end of the hopper, the abrasive falls into the mixing tube, from where it is sucked up through the abrasive hose. The suction force can be adjusted by means of the regulating slide valve. The abrasive hose with abrasive leads to the blast nozzle. A compressed air hose is also connected to the nozzle. The foot pedal is used to apply pressure to the compressed air hose. This creates a vacuum in the abrasive hose, causing the abrasive to be drawn in from the hopper and creating a flow of abrasive. The blasting pressure can be adjusted by means of the pressure reducing valve of the compressed air supply.

ABDI-1300 Vacuum Injection Blast Cabinet

The Airblast vacuum injection blast cabinets are designed for rust removal, cleaning, slagging, frosting, chipping and polishing. The unit is especially designed for manual blasting of all sorts of smaller items.

The cabinet consists of a working chamber with underneath a blast medium funnel. A dust filter with pre-separator is part of the cabinet.
The working chamber is covered with 3 mm rubber on the walls and the door. Attached to the blast cabin, is a pre-separator to separate the heavy parts from the air flow before the air flow enters the dust filter.
Underneath the funnel, the injector is attached.

Dimensions			
	Cabinet	**Working area**	**Door**
Height	2490 mm	1100 mm	850 mm
Width	1350 mm	1300 mm	700 mm
Depth	1700 mm	1000 mm	

Delivery includes:

- revolving door with safety control switch.
- lighting 4x18 Watt.
- 3 perforated grids in working area.
- 1 window exchangeable.
- 1 window securit.
- 2 flexible rubber openings.
- build-in controlpanel with main switch, control safety switches for exhauster and lighting.
- 1 nozzle holder with 8 mm Borium Carbid nozzle.
- blast hose which is guided through the roof of the machine.
- reducing valve (0 - 10 bar) operated by a pilot valve with manometer on the front of the machine.
- pneumatic footpedal.

Operating principle

The abrasive falls into the hopper via the work grating in the working area of the blast cabinet. At the lower end of the hopper, the abrasive falls into the mixing tube, from where it is sucked up through the abrasive hose. The suction force can be adjusted by means of the regulating slide valve. The abrasive hose with abrasive leads to the blast nozzle. A compressed air hose is also connected to the nozzle. The foot pedal is used to apply pressure to the compressed air hose. This creates a vacuum in the abrasive hose, causing the abrasive to be drawn in from the hopper and creating a flow of abrasive. The blasting pressure can be adjusted by means of the pressure reducing valve of the compressed air supply.

ABDI-1500 Vacuum Blast Cabinet

The Airblast vacuum injection blast cabinets are designed for rust removal, cleaning, slagging, frosting, chipping and polishing. The unit is especially designed for manual blasting of all sorts of smaller items.

The cabinet consists of a working chamber with underneath a blast medium funnel. A dust filter with pre-separator is part of the cabinet.
The working chamber is covered with 3 mm rubber on the walls and the door. Attached to the blast cabin, is a pre-separator to separate the heavy parts from the air flow before the air flow enters the dust filter.
Underneath the funnel, the injector is attached.

Dimensions			
	Cabinet	**Working area**	**Door**
Height	2790 mm	1000 mm	850 mm
Width	1560 mm	1500 mm	700 mm
Depth	1700 mm	1000 mm	

Delivery includes:

- revolving door with safety control switch.
- lighting 4x18 Watt.
- 3 perforated grids in working area.
- 1 window exchangeable.
- 1 window securit.
- 2 flexible rubber openings.
- build-in controlpanel with main switch, control safety switches for exhauster and lighting.
- 1 nozzle holder with 8 mm Borium Carbid nozzle.
- blast hose which is guided through the roof of the machine.
- reducing valve (0 - 10 bar) operated by a pilot valve with manometer on the front of the machine.
- pneumatic footpedal.

Operating principle

The abrasive falls into the hopper via the work grating in the working area of the blast cabinet. At the lower end of the hopper, the abrasive falls into the mixing tube, from where it is sucked up through the abrasive hose. The suction force can be adjusted by means of the regulating slide valve. The abrasive hose with abrasive leads to the blast nozzle. A compressed air hose is also connected to the nozzle. The foot pedal is used to apply pressure to the compressed air hose. This creates a vacuum in the abrasive hose, causing the abrasive to be drawn in from the hopper and creating a flow of abrasive. The blasting pressure can be adjusted by means of the pressure reducing valve of the compressed air supply.

ABD-1000 Pressure Blast Cabinet

AIRBLAST

This compact blast cabinet is primaraly suitable for delicate or lighter work such as:

- cast and construction operations
- removing of mill scale, rust and coating layers
- dulling of non-ferrous metals

The cabinet consists of a working chamber with underneath a blast medium funnel. A dust filter with pre-separator is part of the cabinet.
The working chamber is covered with 3 mm rubber on the walls and the door. Attached to the blast cabin, is a pre-separator to separate the heavy parts from the air flow before the air flow enters the dust filter.
Underneath the funnel, the injector is attached. The vessel is provided with wear resistant parts to minimize maintenance.

The installation is constructed of 3mm steelplate and finished with a coatinglayer in the colour grey.

Dimensions			
	Cabinet	**Working area**	**Door**
Height	2490 mm	1000 mm	850 mm
Width	1050 mm	1000 mm	700 mm
Depth	1700 mm	1000 mm	

Delivery includes:
- revolving door with safety control switch
- lighting 4x18 Watt
- 3 perforated grids in working area
- 1 window exchangeable
- 1 window securit
- 2 flexible rubber openings
- build-in controlpanel with main switch, control safety switches for exhauster and lighting
- 1 nozzle holder with 6 mm Boron Carbide Nozzle
- blast hose 3/4” which is guided through the roof of the machine
- reducing valve (0 - 10 bar) operated by a pilot valve with manometer on the front of the machine
- electric footpedal to operate the blastvessel

Automatic blasting vessel:
Diameter : Ø 350 mm
Max. pressure : 6 bar

Construction:
The blastvessel has a capacity of approximate 17 litres, made from 5 mm steelplate and is provided with an automatic closing dual stage popup valve and grithopper with sieve. Further complete with an electrical 2/2 way inlet valve 1” and abrasive metering valve type “Microvalve”.

Operating principle:
The abrasive falls into the hopper via the work grating in the working area of the blast cabinet. From the hopper the abrasive is poured into the blast vessel. By depressing the foot pedal the blast vessel is pressurized and closed by the cone. When the blast vessel is filled and pressurized the abrasive is transported to the working area of the blast cabinet via the abrasive hose. The abrasive hose with abrasive leads to the blast nozzle. The ratio between compressed air and abrasive can be adjusted by using the abrasive metering valve and the air regulator of the compressed air supply.

ABD-1300 Pressure Blast Cabinet

AIRBLAST

The Airblast Pressure Blast Cabinets are designed for manual or automatic shotblasting of all sorts of items. The general jobs done in these cabinets are continuous and power work, like: cast and construction operations, the removing of mill scale, rust, coating layers to dull non-ferrous metals

The execution is according the compressed air system. The shotblasting vessel is constructed directly under the shotblasting chamber and provided with wear resistant parts which need little maintenance. The dust filter installation is constructed behind the working space, has a special deflector plate to separate the dust from the airflow. The two catridges filters with automatic pulsing system remove the finest dust.

The back-wall of the working area and side door is completely covered with 3mm rubber. The installation is constructed of 3mm steel plate and finished with a coating layer in the colour grey.

The Airblast Pressure Blast Cabinet with pressure blast method offers 3-4 times the production and impact of the suction/induction blast method. The high production method should be considered when there is a large area to be blasted, or where heavy rust, multiple layers of paint, or heavy oxides and scale must be removed.

Dimensions			
	Cabinet	**Working area**	**Door**
Height	2490 mm	1100 mm	850 mm
Width	1350 mm	1300 mm	700 mm
Depth	1700 mm	1000 mm	

Delivery includes:

- revolving door with safety control switch
- lighting 4x18 Watt
- 3 perforated grids in working area
- 1 window exchangeable
- 1 window securit
- 2 flexible rubber openings
- build-in controlpanel with main switch, control safety switches for exhauster and lighting
- 1 nozzle holder with 6 mm Boron Carbide Nozzle
- blast hose 3/4” which is guided through the roof of the machine
- reducing valve (0 - 10 bar) operated by a pilot valve with manometer on the front of the machine
- electric footpedal to operate the blastvessel

Automatic blasting vessel - dimensions:
Diameter : Ø 350 mm
Max. pressure : 6 bar

Construction:
The blastvessel has a capacity of approximate 17 litres, made from 5 mm steelplate and is provided with an automatic closing dual stage popup valve and grithopper with sieve. Further complete with an electrical 2/2 way inlet valve 1” and abrasive metering valve type “Microvalve”.

Operating principle:
The abrasive falls into the hopper via the work grating in the working area of the blast cabinet. From the hopper the abrasive is poured into the blast vessel. By depressing the foot pedal the blast vessel is pressurized and closed by the cone. When the blast vessel is filled and pressurized the abrasive is transported to the working area of the blast cabinet via the abrasive hose. The abrasive hose with abrasive leads to the blast nozzle. The ratio between compressed air and abrasive can be adjusted by using the abrasive metering valve and the air regulator of the compressed air supply.

ABD-1500 Pressure Blast Cabinet

The Airblast Pressure Blast Cabinets are designed for manual or automatic shotblasting of all sorts of items. The general jobs done in these cabinets are continuous and power work, like: cast and construction operations, the removing of mill scale, rust, coating layers to dull non-ferrous metals

The execution is according the compressed air system. The shotblasting vessel is constructed directly under the shotblasting chamber and provided with wear resistant parts which need little maintenance. The dust filter installation is constructed behind the working space, has a special deflector plate to separate the dust from the airflow. The two cartridges filters with automatic pulsing system remove the finest dust.

The back-wall of the working area and side door is completely covered with 3mm rubber. The installation is constructed of 3mm steel plate and finished with a coating layer in the colour grey.

The Airblast Pressure Blast Cabinet with pressure blast method offers 3-4 times the production and impact of the suction/induction blast method. The high production method should be considered when there is a large area to be blasted, or where heavy rust, multiple layers of paint, or heavy oxides and scale must be removed.

Dimensions			
	Cabinet	**Working area**	**Door**
Height	2790 mm	1000 mm	850 mm
Width	1560 mm	1500 mm	700 mm
Depth	1700 mm	1000 mm	

Delivery includes:

- swing doors with safety controller
- lighting 4x18 Watt
- 3 perforated grids in working area
- 1 window exchangeable
- 1 window securit
- 2 flexible rubber openings
- build-in controlpanel with main switch, control safety switches for exhauster and lighting
- 1 nozzle holder with 8 mm Boron Carbide Nozzle
- blast hose 3/4” which is guided through the roof of the machine
- reducing valve (0 - 10 bar) operated by a pilot valve with manometer on the front of the machine
- pneumatic footpedal to operate the blastvessel

Automatic blasting vessel - dimensions
Diameter : Ø 350 mm
Max. pressure : 6 bar

Construction:
The blastvessel has a capacity of approximate 17 litres, made from 5 mm steelplate and is provided with an automatic closing dual stage popup valve and grithopper with sieve. Further complete with an electrical 2/2 way inlet valve 1” and abrasive metering valve type “Microvalve”.

Operating principle:
The abrasive falls into the hopper via the work grating in the working area of the blast cabinet. From the hopper the abrasive is poured into the blast vessel. By depressing the foot pedal the blast vessel is pressurized and closed by the cone. When the blast vessel is filled and pressurized the abrasive is transported to the working area of the blast cabinet via the abrasive hose. The abrasive hose with abrasive leads to the blast nozzle. The ratio between compressed air and abrasive can be adjusted by using the abrasive metering valve and the air regulator of the compressed air supply.

Blast Rooms

Each Airblast Blast Room is tailor made for the specific requirement of each individual customer – your operational demands are unique, why should you compromise with a standard solution?

Each blast room element is engineered to be in balance with the other elements – this ensures that the flow of products, the flow of abrasive, and the flow of dust is smooth and uniform.

After a thorough investigation and analysis of the objectives and goals of the blast room our team of engineers draw upon years of experience and an extensive installed base of blast rooms in operation around the world to ensure that the Airblast Blast Room proposal satisfies all of the criteria as well as allowing opportunities for future development.

Each Airblast Blast Room is tailor made for the specific requirement of each individual customer – your operational demands are unique, why should you compromise with a standard solution?

Each blast room element is engineered to be in balance with the other elements – this ensures that the flow of products, the flow of abrasive, and the flow of dust is smooth and uniform.

After a thorough investigation and analysis of the objectives and goals of the blast room our team of engineers draw upon years of experience and an extensive installed base of blast rooms in operation around the world to ensure that the Airblast Blast Room proposal satisfies all of the criteria as well as allowing opportunities for future development.

As each Airblast Blast Room is designed specifically on a project by project basis the possibilities for customization are endless: multiple blasters operating on one room; product access through one end or both ends of the blast room; abrasive recovery options including: sweeping pit, cross conveyor, U shape, H shape, and complete floor automatic recovery with conveyor system or scrappers; down draft or cross draft dust extraction; automatic grit recycling incorporating magnetic separation.

For additional flexibility Airblast can provide a combined blast and paint room: once the blasting is completed and the abrasive recovered a separate paint extraction system is activated and painting of the product can begin. The reduced product handling provides additional quality control benefits as well as cost savings.

Airblast has an extensive reference list of installed blast rooms around the world working with companies such as Keppel Fells Singapore, Gdansk Shipyard in Poland, Zamil Steel in Saudi Arabia and many others.

Each Airblast Blast Room is engineered to the highest quality standards and is supplied with region specific certification. The key elements and processes in a blast room are detailed below:

Abrasive Management
After impacting the substrate abrasive falls to the floor and through the grating into the recovery system, or remains of the floor to be manually moved into the recovery system in the case of sweeping pit, cross conveyor, U & H shape recovery systems. The abrasive is guided onto the recovery system by a V-hopper section designed to ensure that overload is impossible. Airblast scrapper and conveyor recovery systems both utilse totally enclosed, sealed for life, maintenance free motors. The recovery system transports the abrasive to the bucket elevator (which utilizes Columbus buckets to ensure that overload is impossible) which delivers the abrasive into the cascade cleaning system with double air wash and vibrating screen abrasive classification. From the cascade cleaner the abrasive is deposited in a silo ready for return to the blast pot and reuse.

Dust Management
Dust laden air is extracted from the room through wall mounted ducts and enters the inlet plenum of the collector where heavy particles fall immediately into the hopper. As the air flows through the filter cartridges dust is deposited on the outside of the filtering media. Solenoid valves introduce jets of high-pressure air into each pair of cartridges alternately - the resulting reverse airflow cleans the filter cartridges. Dust removed from the filter surface settles into the hopper. As each pair of filter cartridges is cleaned in succession the operation is uninterrupted. Air inlet grids return 80% - 90% of the air back into the blast room, this is critical especially in climate controlled blast rooms.

Electrical Panel
The Electrical Panel is the central point from which each of the elements of the blast room can be controlled and monitored. Pre-loaded start up and shut down sequence programs ensure ease of use and the inclusion of the Star-triangle starter guards against electric overload.

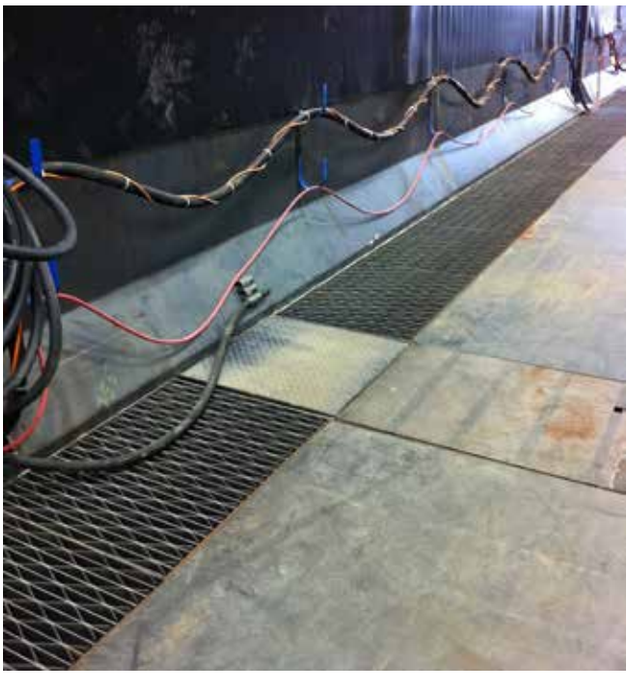

Airblast Blast Room Video

Ultra High Pressure Water Jetting

We offer a full range of High Pressure (HP) & Ultra High Pressure(UHP) plunger pumps and water jetting equipment. Every pump & unit we supply is tested and certificated for performance prior to despatch.

Our range of pumps operate at pressures from 70 to 2750 bar and flow rates up to 773 lpm with ratings from 30 to 375 kW (40 to 500 hp). The pumps are ruggedly constructed and produced in nine frame sizes, each including a range of plunger sizes. This allows selection of the ideal pump for the job. Close-coupled reduction gearbox drives are available, with a choice of gear ratio to suit most prime mover speeds. Also available are SAE engine adaptor housings allowing the pumps to be flange mounted to diesel engines, ensuring perfect alignment and making installation simple. The power end of the pump features cast iron casings with splash or pressure lubrication and oil cooling, according to the application. Pump heads are manufactured from stainless steel as standard. The in-line valve arrangement prevents the adverse effects of cyclic stress within the headblock, while allowing all working components to be easily removed on site for service. Solid ceramic plungers extend the life of the self adjusting plunger seals. The UB-range of UHP pumps include design features that allows seals and valves to be monitored without tools and maintenance on individual cylinders.

Typical Applications:

- Water & abrasive blasting
- Surface preparation (coatings & corrosion removal)
- Pipe cleaning & de-scaling
- Tank & vessel cleaning
- Sub-sea cleaning & cutting
- Floor, road & runway cleaning
- Pressure testing
- Cold cutting
- Road re-texturing & white line removal
- Heat exchanger tube cleaning
- Hydrodemolition

Water Jetting Units

Skid, site or road trailer and truck mounted units are available with or without sound reduction enclosures, driven by a choice of diesel engines or electric motors for use in safe or hazardous areas (ATEX compliant where required). All fabrications are grit blasted and high quality powder coated for adurable finish. For offshore applications fully certified crashframes or containers are available with paint finishes to customer specification. Every unit supplied by Airblast is robust, simple to operate and maintain, and designed for longevity. Diesel engines and electric motors are sourced from world leading manufacturers and comply with the latest international standards. Simple control panels are used throughout the product range avoiding the need for PLC systems, ensuring reliability & easy trouble shooting. High capacity water filters and stainless steel suction line fittings are used as standard and boost pumps fitted for higher pressure applications. Shutdown switches are fitted where necessary to monitor various pump and prime mover functions.

Accessories

To complement the pump sets, a comprehensive range of water jetting accessories is available to cover every application:

- Hand held jetting guns - land and underwater
- Foot control valves
- Unloader and diverter valves
- Surface cleaning jets - pencil, fan and rotating
- Pipe and tube cleaning jets - fixed and rotating
- Heat exchanger cleaning - manual and automatic
- Tank cleaning heads
- Floor, road and runway cleaning
- Water abrasive blasting
- High pressure hoses, flexible and rigid lances

Worldwide Support

Backed by a comprehensive spares stock holding, we have dedicated Service Engineers who travel nationally and internationally keeping our pumps running round the clock. We also work closely with our overseas agents who have been trained in the selection, operation and maintenance of our product range ensuring they can provide the vital after sales service demanded by today's fast moving industry.

WATER JETTING PUMPS OVERVIEW								
	Plunger dia	Nominal power rating		Nominal flow rate			Pressure	
Model	mm	kW	hp	lpm	igpm	usgpm	bar	psi
HPS400	14 35	30	40	16 103	3.6 22.6	4.4 27.2	1000 160	14500 2320
HPS650	18 35	48	65	27 103	6 22.6	7.2 27.2	1000 250	14500 3625
HPS1000	20 50	75	100	28 177	6.2 38.9	7.5 46.8	1400 220	20300 3190
HPS2200	24 55	160	220	53 279	11.7 61.3	14.1 73.9	1400 310	20300 4495
HPS3000	30 75	225	300	84 484	18.5 106.4	22.3 128.2	1400 250	20300 3625
HPS5000	30 75	375	500	141 806	31 177.4	37.3 213.7	1400 250	20300 3625
UB10	11	48	65	10.3	2.3	2.8	2600	38000
UB15	14	75	100	13.8	3	3.7	2750	40000
UB30	18 22	160	220	30 45	6.6 9.8	8 11.8	3000 2000	43500 29000

The chart above shows extreme pressure/flow combinations with smallest & largest plungers fitted. All pumps have a range of plunger sizes other than the UB 10 & 15.

Notes

AIRBLAST

Product	Page
Blastman B20CX	140
Blastman B20S	142
Blastman B20C-S	144
Blastman B20ML (man-lift)	146
Blastman B16CX	148
Blastman B16S	150
Blastman B16ML (man-lift)	152
Blastman B12S	154
Blastman B20LW	156
Blastman MBU	158
Blastman Transfer cars	160

Built for blasting

The unique Blastman Robot delivers innovative solutions, applying the very latest advanced technologies to overcome surface pre-treatment challenges.

Increasingly the number one choice for blast-cleaning installations in the entire world is the Blastman Robot, which can be incorporated in the supply of entire abrasive blast-cleaning and surface treatment lines.

YouTube

Built for blasting

The Blastman B20CX is designed for the most demanding blasting environments. The Blastman B20CX is an ideal solution to replace traditional manual blasting. The robot is controlled by an operator sitting in the control cabin. The Blastman B20CX can also be used in automatic mode as a fullfeatured robot. The Blastman B20CX robot is the perfect choice for diverse products from individual items to mass production.

The Blastman B20CX robot applications include: railway rolling stock, all kinds of steel structures and castings.

Blastman B20CX

Robot configuration

		Range	Max. speed	Type
Axis 1	Robot bridge longitudinal	5 - 100 m	0,3 m/s	Lin.
Axis 2	Arm/cabin carriage across	3 - 35 m	0,2 m/s	Lin.
Axis 3	Rotation of the telescope	360°	18,7°/s	Rot.
Axis 4	Arm/cabin vertical (telesc.)	2 - 6 m	0,26 m/s	Lin.
Axis 5	Shoulder	175°	21,5°/s	Rot.
Axis 6	Elbow	225°	19,9°/s	Rot.
Axis 7	Arm head	360°	180°/s	Rot.
Axis 8	Nozzle	270°	215°/s	Rot.

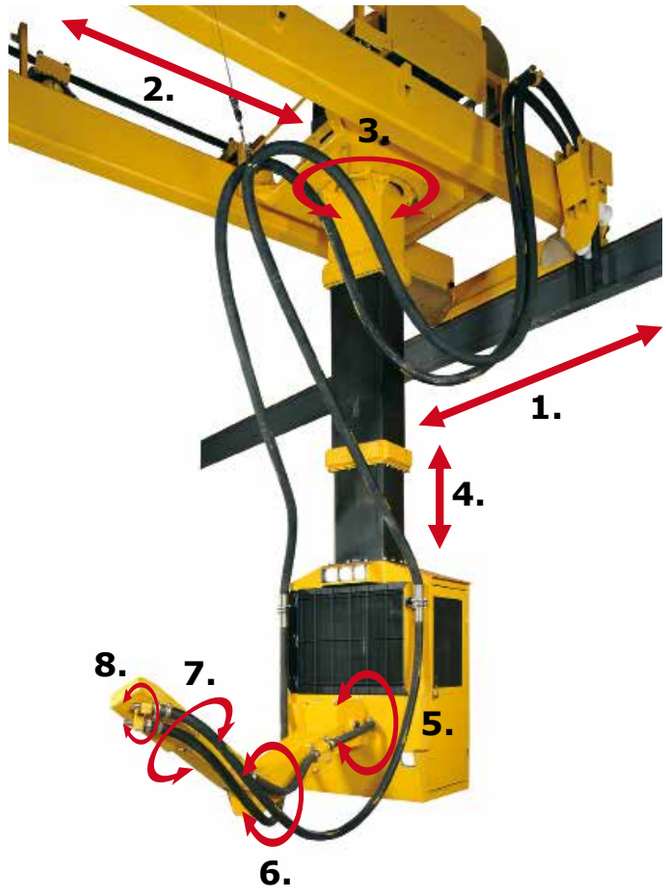

Operation modes

Manual
Automatic
Parameter based automatic

Operational param.

Nozzle diam.	6 - 19 mm
Nozzle diam.	1/4" - 3/4"
No. of nozzles	1 or 2
Air pressure	4 - 11 bar
Air pressure	50 - 150 psi
Cleaning rate	....200 m²/h
Cleaning rate	....2150 ft²/h

Teaching methods

Teach In (option)
PTP (option)
Offline (option)
Parameter based (option)

Technical

Voltage	380-500V 50/60Hz
Contr. voltage	24 VDC
Sealing *	IP65
Assembly	Roof mounted
Weight **	5100 kg

* Appl. to electrics in the blast room
** Depends on width

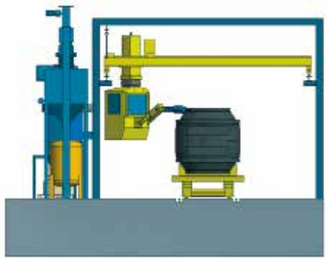

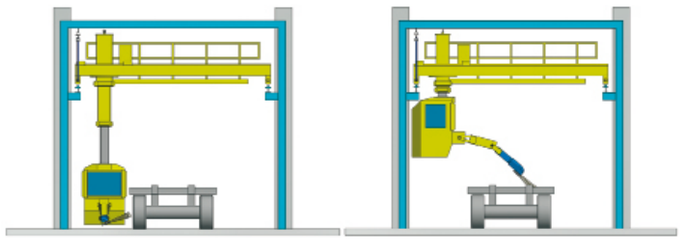

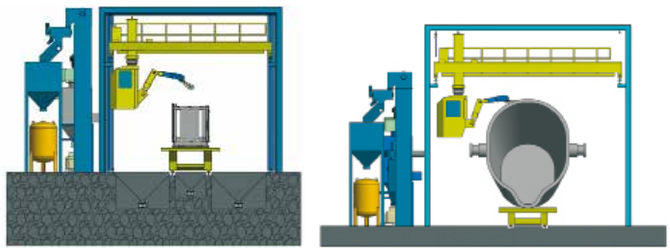

Options

Control
- Manipulator without robot features
- License for software updates
- PTP Teaching by teach pendant
- Offline teaching
- VPN connection for remote diagnosis and SW updates
- Mobile monitoring
- Control of blast room machineries

Convenience
- AC in Control cabin
- Radio in Control cabin

Blast equipment
- Complete operational blast room
- Blast pot for robot
- Blast hose
- Blast hose connectors
- Blast nozzles

Other
- Rails for the robot
- Transfer car for the work piece
- Warranty extension
- Installation services

YouTube

Built for blasting

The Blastman B20S is a gantry-type robot with telescopic and joint booms to direct the blasting nozzles. The Blastman B20S robot typically consists of eight (8) robot axis. Due to the overhead crane type design, and movable telescopic arm, the robot has excellent reachability and can blast even the most complex workpieces whilst moving within the entire area of the blast room.

The Blastman B20S robot is always customized to fit into the dimensions of the blast room and to meet the requirements of the work piece to be blasted. With its telescopic arm the robot can even reach inside rail cars through windows or other holes to blast clean interior surfaces. Blastman B20S robot applications include: railway rolling stock, all kinds of steel structures and castings.

Blastman B20S robot applications include: railway rolling stock, all kinds of steel structures and castings.

Blastman B20S

Robot configuration

		Range	Max. speed	Type
Axis 1	Robot bridge longitudinal	5 - 100 m	0,3 m/s	Lin.
Axis 2	Arm carriage across	3 - 35 m	0,25 m/s	Lin.
Axis 3	Rotation of the telescope	360°	18,7°/s	Rot.
Axis 4	Arm vertical (telescope)	2 - 6 m	0,26 m/s	Lin.
Axis 5	Shoulder	175°	21,5°/s	Rot.
Axis 6	Elbow	225°	19,9°/s	Rot.
Axis 7	Arm head	360°	180°/s	Rot.
Axis 8	Nozzle	270°	215°/s	Rot.

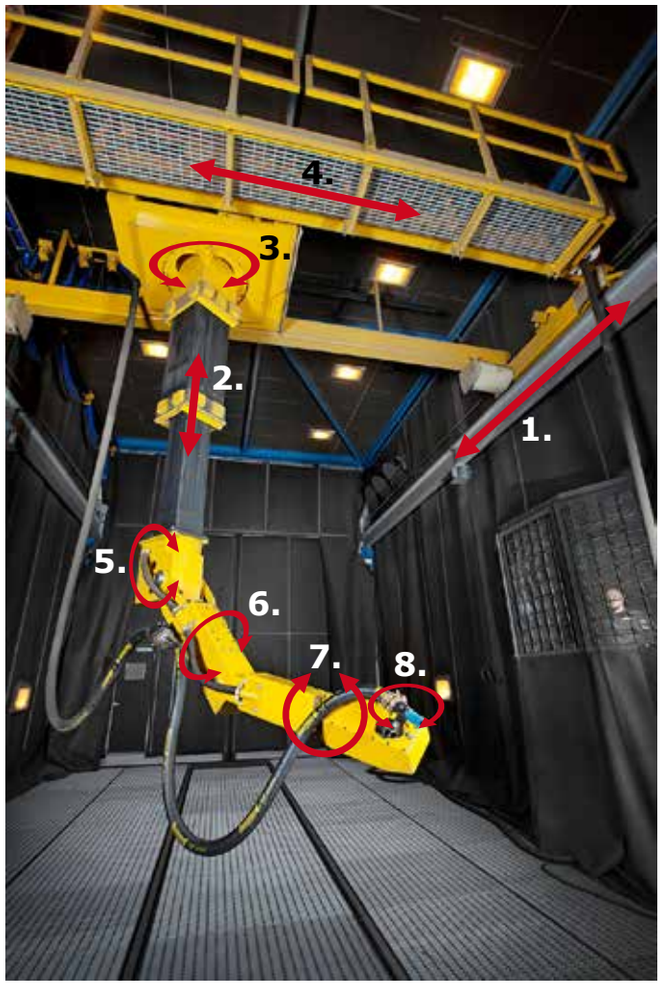

Operation modes

Manual
Automatic
Parameter based automatic

Operational param.

Nozzle diam.	6 - 19 mm
Nozzle diam.	1/4" - 3/4"
No. of nozzles	1 or 2
Air Pressure	4 - 11 bar
Air Pressure	50 - 150 psi
Cleaning rate	....200 m²/h
Cleaning rate	....2150 ft²/h

Teaching methods

Teach In (option)
PTP
Offline (option)
Parameter based (option)

Technical

Voltage	380-500V 50/60Hz
Contr. voltage	24 VDC
Sealing *	IP65
Assembly	Roof mounted
Weight **	5100 kg

* Appl. to electrics in the blast room
** Depends on width

Options

Control
- License for software updates
- Offline teaching
- VPN connection for remote diagnosis and SW updates
- Mobile monitoring
- Control of blast room machineries

Blast equipment
- Complete operational blast room
- Blast pot for robot
- Blast hose
- Blast hose connectors
- Blast nozzles

Other
- Rails for the robot
- Transfer car for the work piece
- Warranty extension
- Installation services

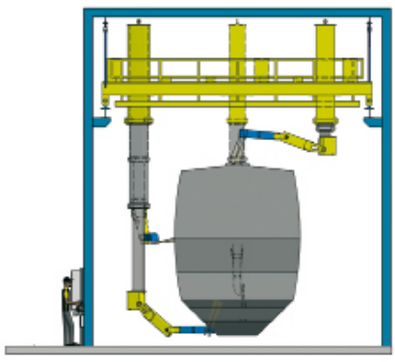

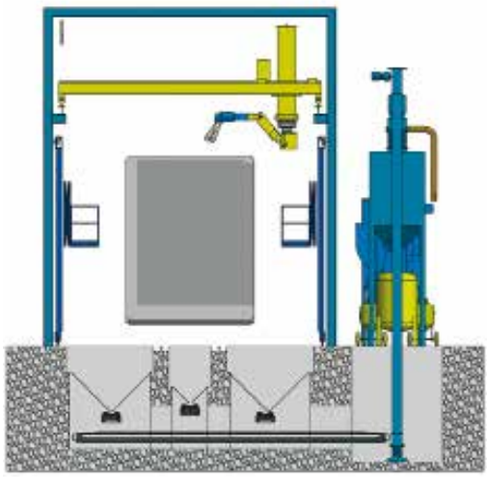

YouTube

Built for blasting

The Blastman B20CS is a bridge type 8-axis blast cleaning robot designed to blast large work pieces. The B20CS has two separate bridges: one to carry the robot arm and one to carry the movable operator cabin. An operator can steer the robot with joysticks from the operator cabin which moves on 4-axis. When the B20CS is used as a robot the operator cabin bridge can be driven into the other end of the blast room.

The functionality of the B20CS robot is similar to B20S model: it is customized to fit into the dimensions of the blast room and to meet the requirements of the work piece to be blasted. With its telescopic arm the robot can even reach inside rail cars through windows or other holes to blast clean the interior surfaces. The Blastman B20CS robot applications include: railway rolling stock, transformers, diverse steel structures and castings.

Blastman B20C-S

Robot configuration

		Range	Max. speed	Type
Axis 1	Robot bridge longitudinal	5 - 100 m	0,3 m/s	Lin.
Axis 2	Arm carriage across	3 - 35 m	0,25 m/s	Lin.
Axis 3	Rotation of the telescope	360°	18,7°/s	Rot.
Axis 4	Arm vertical (telescope)	2 - 6 m	0,26 m/s	Lin.
Axis 5	Shoulder	175°	21,5°/s	Rot.
Axis 6	Elbow	225°	19,9°/s	Rot.
Axis 7	Arm head	360°	180°/s	Rot.
Axis 8	Nozzle	270°	215°/s	Rot.
Axis 9	Cabin bridge	5 - 100 m	0,3 m/s	Lin.
Axis 10	Cabin carriage	3 - 35 m	0,25 m/s	Lin.
Axis 11	Cabin telescope rotation	360°	20°/s	Rot.
Axis 12	Cabin telescope	2 - 6 m	0,26 m/s	Lin.

Operation modes

Manual
Automatic
Parameter based automatic

Operational param.

Nozzle diam.	6 - 19 mm
Nozzle diam.	1/4" - 3/4"
No. of nozzles	1 or 2
Air pressure	4 - 11 bar
Air pressure	50 - 150 psi
Cleaning rate	....200 m²/h
Cleaning rate	....2150 ft²/h

Teaching methods

Teach In
PTP (option)
Offline (option)
Parameter based (option)

Technical

Voltage	380-500V 50/60Hz
Contr. voltage	24 VDC
Sealing *	IP65
Assembly	Roof mounted
Weight **	10 000 kg

* Appl. to electrics in the blast room
** Depends on width

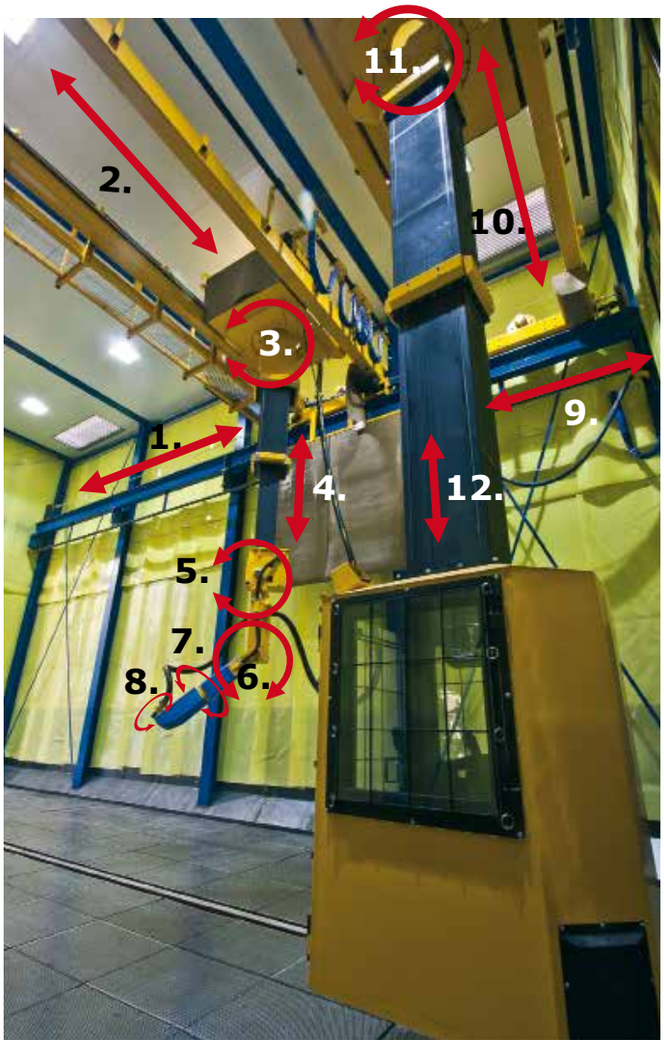

Options

Control
- License for software updates
- Offline teaching
- VPN connection for remote diagnosis and SW updates
- Mobile monitoring
- Control of blast room machineries

Convenience
- AC in control cabin
- Radio in control cabin

Blast equipment
- Complete operational blast room
- Blast pot for robot
- Blast hose
- Blast hose connectors
- Blast nozzles

Other
- Rails for the robot
- Transfer car for the work piece
- Warranty extension
- Installation services

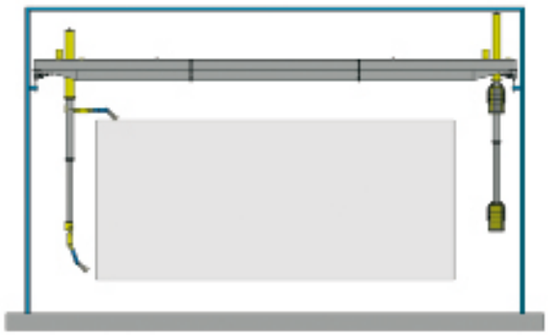

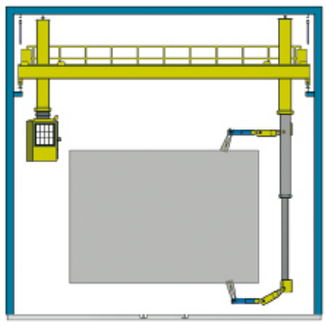

Blastman B20ML (man-lift)

Built for blasting

The Blastman B20ML is a gantry-type man lift with telescopic boom to move the operator platform around the workpiece. The Blastman B20ML has been engineered for both blast and paint rooms.

The Blastman B20ML operates as an overhead crane and provides the best possible access around large work pieces without any scaffolding, movable boom lifts, or ladders. The Blastman B20ML can be installed in paint booths replacing the traditional scaffoldings and boom lifts.

Blastman B20ML (man-lift)

Manlift configuration

		Range	Max. speed	Type
Axis 1	Bridge longitudinal	3 - 100 m	0,3 m/s	Lin.
Axis 2	Platform carriage	3 - 35 m	0,25 m/s	Lin.
Axis 3	Platform telesc.rotation	360°	20°/s	Rot.
Axis 4	Platform telescope	2 - 6 m	0,26 m/s	Lin.

Operation modes

Manual by push buttons
External outside blast room

Operational param.

Max load: 150 kg
Safety certificate

Technical

Voltage	380-500V 50/60Hz
Contr. voltage	24 VDC
Sealing *	IP65
Assembly	Roof mounted
Weight **	4500 kg

* Appl. to electrics in the blast room
** Depends on height

Options

Blast equipment
- Complete operational blast room
- Blast pot for robot
- Blast hoses
- Blast hose connectors
- Blast nozzles

Other
- Rails for the manlift
- Warranty extension
- Installation services

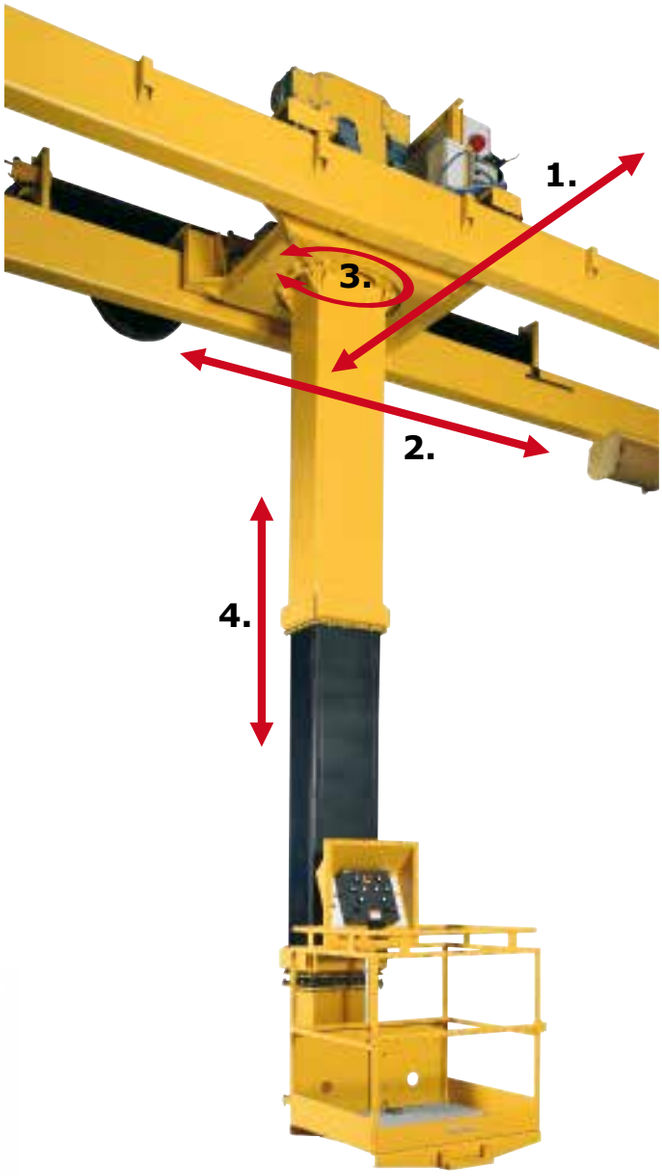

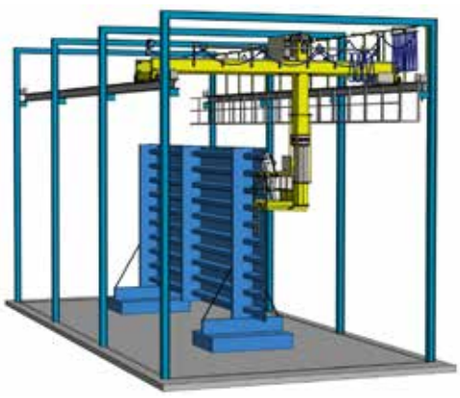

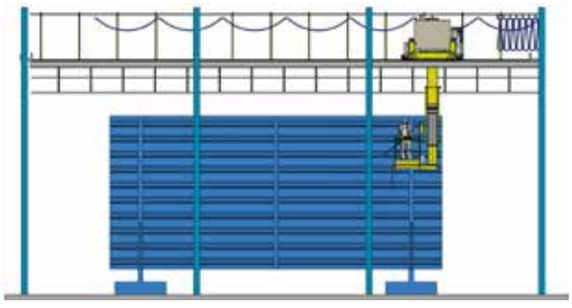

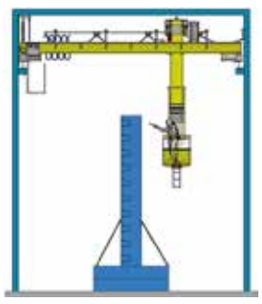

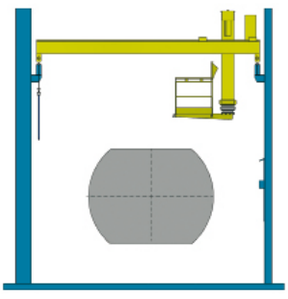

6

Built for blasting

The Blastman B16CX is an ideal solution to replace traditional manual blasting. The robot is controlled by an operator sitting in the control cabin. The Blastman B16CX can also be used in automatic mode as a fullfeatured robot. The Blastman B16CX robot is the perfect choice to blast diverse products from individual items to mass production.

Blastman B16CX

Robot configuration

		Range	Max. speed	Type
Axis 1	Main frame horiz.	3 - 50 m	0,3 m/s	Lin.
Axis 2	Arm and cabin vert.	2 - 10m	0,3 m/s	Lin.
Axis 3	Arm rotation	180°	25,2°/s	Rot.
Axis 4	Shoulder	175°	21,5°/s	Rot.
Axis 5	Elbow	225°	19,9°/s	Rot.
Axis 6	Arm head	360°	180°/s	Rot.
Axis 7	Nozzle	270°	215°/s	Rot.

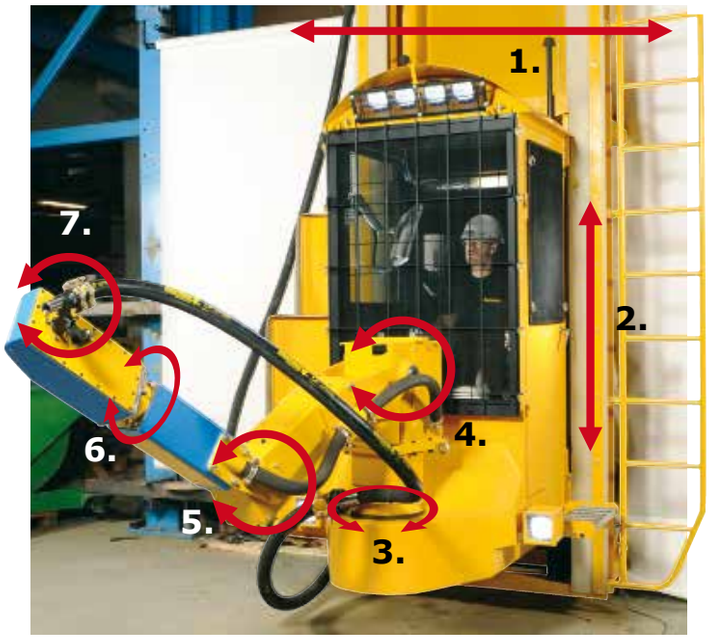

Operation modes

Manual
Automatic
Parameter based automatic

Operational param.

Nozzle diam.	6 - 19 mm
Nozzle diam.	1/4" - 3/4"
No. of nozzles	1 or 2
Air pressure	4 - 11 bar
Air pressure	50 - 150 psi
Cleaning rate	....200 m²/h
Cleaning rate	....2150 ft²/h

Teaching methods

Teach In (option)
PTP (option)
Offline (option)
Parameter based (option)

Technical

Voltage	380-500V 50/60Hz
Contr. voltage	24 VDC
Sealing *	IP65
Assembly	Wall mounted
Weight **	5100 kg

*Appl. to electrics in the blast room
** Depends on height

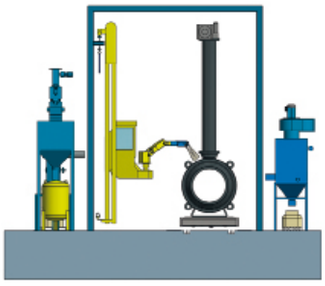

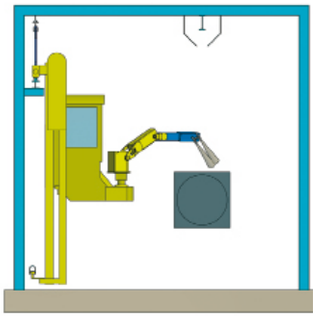

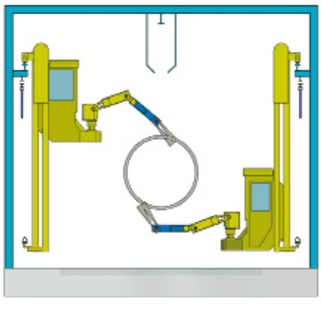

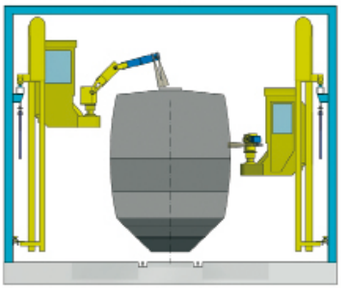

Options

Control
- Manipulator without robot features
- License for software updates
- PTP teaching by teach pendant
- Offline teaching
- VPN connection for remote diagnosis and SW updates
- Mobile monitoring
- Control of blast room machineries

Convenience
- AC in control cabin
- Radio in control cabin

Blast equipment
- Complete operational blast room
- Blast pot for robot
- Blast hose
- Blast hose connectors
- Blast nozzles

Other
- Rails for the robot
- Transfer car for the work piece
- Warranty extension
- Installation services

Built for blasting

The Blastman B16S is a "wall mount-type" blasting robot. The B16S robot operates on the wall of the blast room. The main frame of the robot moves the robot arm in the longitudinal direction of the blast room on rails which are fixed on the walls of the blasting chamber. The hoist carriage moves the horizontal robot arm vertically on the main frame. The robot arm connected to the carriage is to direct and move the blasting nozzle. The Blastman B16S robot typically consists of seven (7) robot axis.

A pair of Blastman B16S robots combined with overhead (monorail) conveyor provide an efficient and flexible blasting solution for even the most complicated work pieces.

YouTube

Blastman B16S

Robot configuration

		Range	Max. speed	Type
Axis 1	Main frame horiz.	3 - 50 m	0,3 m/s	Lin.
Axis 2	Robot arm vert.	2 - 10m	0,3 m/s	Lin.
Axis 3	Arm rotation	180°	25,2°/s	Rot.
Axis 4	Shoulder	175°	21,5°/s	Rot.
Axis 5	Elbow	225°	19,9°/s	Rot.
Axis 6	Arm head	360°	180°/s	Rot.
Axis 7	Nozzle	270°	215°/s	Rot.

Operation modes

Manual (external contr. cabin)
Automatic
Parameter based automatic

Operational param.

Nozzle diam.	6 - 19 mm
Nozzle diam.	1/4" - 3/4"
No. of nozzles	1 or 2
Air pressure	4 - 11 bar
Air pressure	50 - 150 psi
Cleaning rate	....200 m²/h
Cleaning rate	....2150 ft²/h

Teaching methods

Teach In (option with ext. cabin)
PTP
Offline (option)
Parameter based (option)

Technical

Voltage	380-500V 50/60Hz
Contr. voltage	24 VDC
Sealing *	IP65
Assembly	Wall mounted
Weight **	4500 kg

*Appl. to electrics in the blast room
** Depends on height

Options

Control
- Manipulator without robot features
- License for software updates
- Offline teaching
- VPN connection for remote diagnosis and SW updates
- Mobile monitoring
- Control of blast room machineries

Blast equipment
- Complete operational blast room
- Blast pot for robot
- Blast hoses
- Blast hose connectors
- Blast nozzles

Other
- Rails for the robot
- Transfer car for the work piece
- Warranty extension
- Installation services

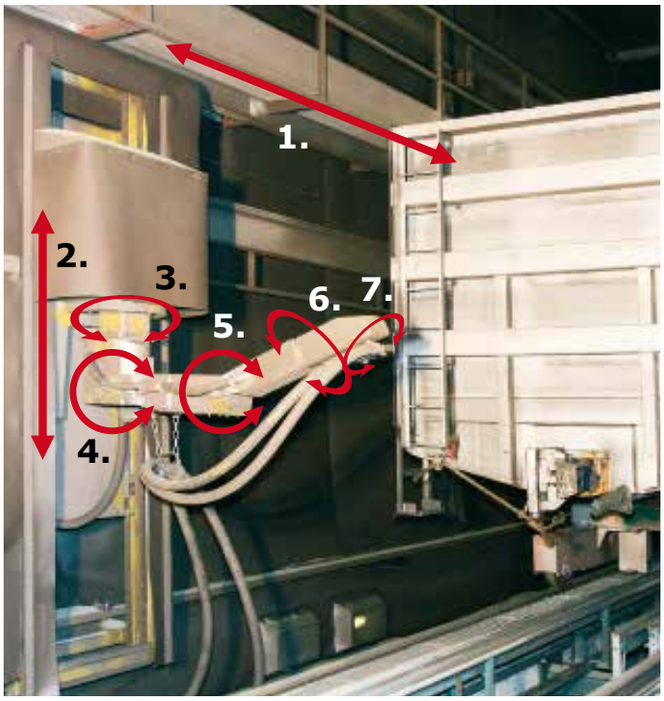

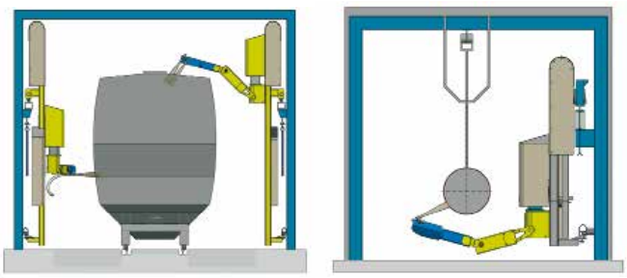

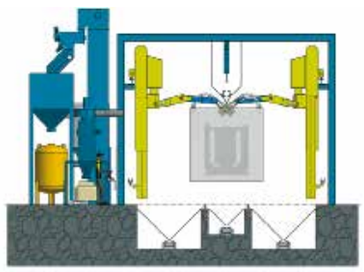

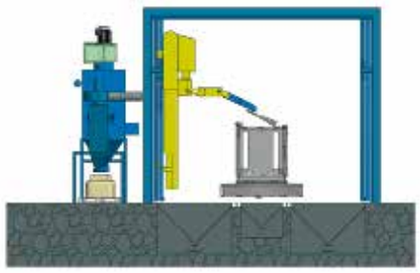

Blastman B16ML (Man-lift)

Built for blasting

The Blastman B16ML is robust and specifically engineered for the harsh blast room environment. The robot helps the operator move the blast nozzle around the workpiece. The man lift can also be used for touch up, inspection, and quality control.

The lift is controlled by the operator using a control panel located on the platform. The lift travels on a rail system fixed to the wall of the blast room. The longitudinal movement (left and right movement of the lift) allows the lift to travel back and forth along the length of the blast room. The hoist of the platform (up and down movement of the platform) provides the ability to elevate the operator platform from a lowered position to the maximum height. The platform on which the operator stands can be rotated in order to access objects across the full width of the blast room.

Blastman B16ML (Man-lift)

Manlift configuration

		Range	Max. speed	Type
Axis 1	Main frame horiz.	3 - 50 m	0,3 m/s	Lin.
Axis 2	Platform vertical	2 - 10m	0,2 m/s	Lin.
Axis 3	Platform rotation	180°	20°/s	Rot.

Operation modes

Manual by push buttons
External outsiode the blast room

Operational param.

Max load: 150 kg
Safety certificate

Technical

Voltage	380-500V 50/60Hz
Contr. voltage	24 VDC
Sealing *	IP65
Assembly	Wall mounted
Weight **	4500 kg

*Appl. to electrics in the blast room
** Depends on height

Options

Blast equipment
- Complete operational blast room
- Blast pot for robot
- Blast hoses
- Blast hose connectors
- Blast nozzles

Other
- Rails for the manlift
- Warranty extension
- Installation services

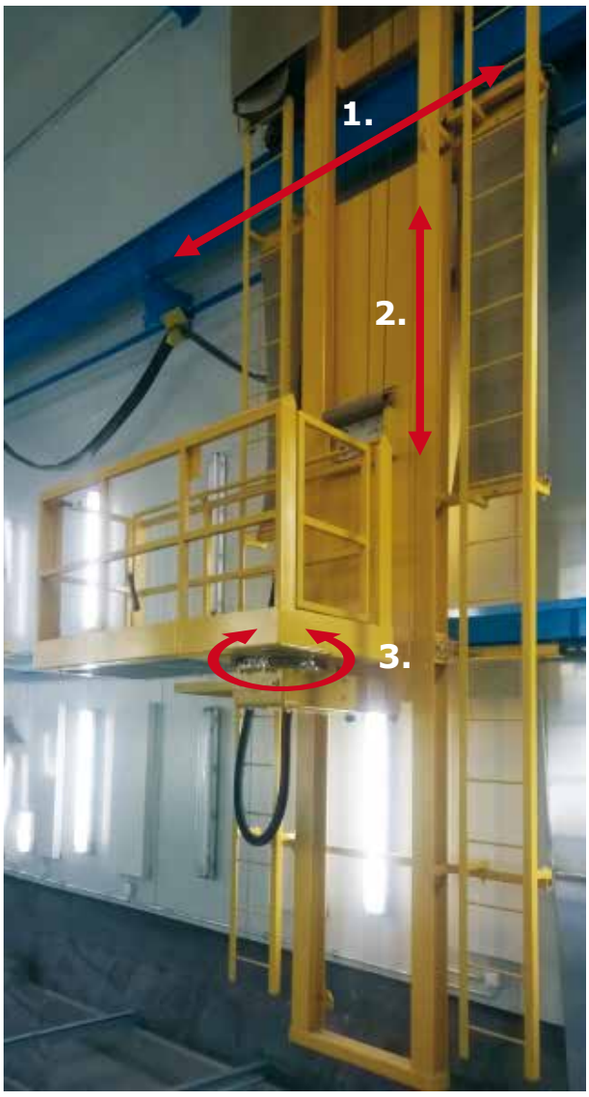

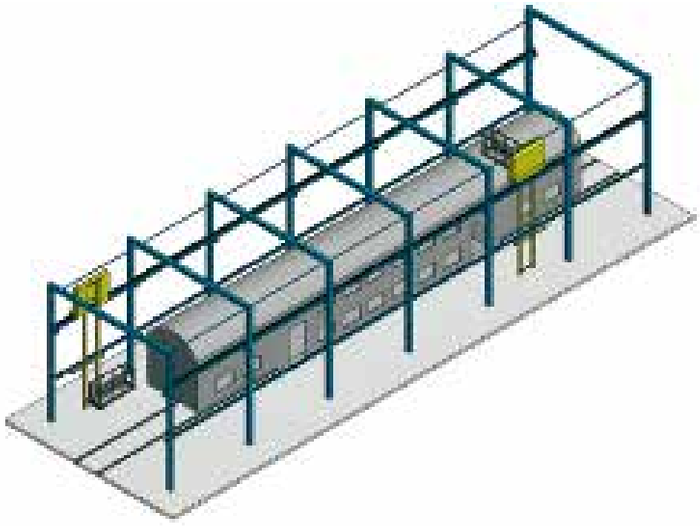

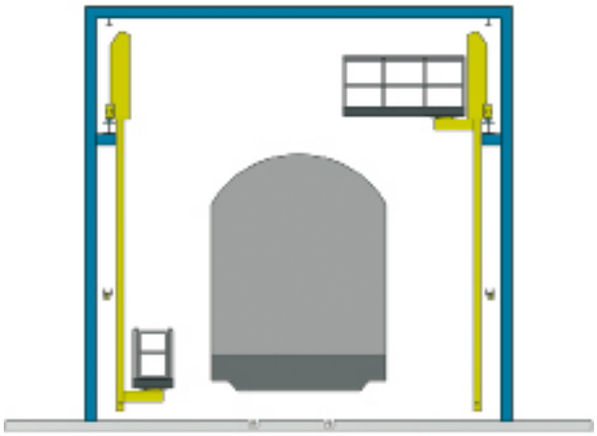

6

YouTube

Built for blasting

The Blastman B12S is a "wall mount-type" blasting robot developed for blasting tubular work pieces such as sections of wind turbine towers. The B12S robot operates on the wall of the blast room. The main frame of the robot moves the robot arm in the longitudinal direction of the blast room on rails which are fixed on the walls of the blast room. The purpose of the robot arm connected to the carriage is to direct and move the blasting nozzle. The Blastman B12S robot typically consists of four (4) internal robot axis and one external axis which control the rotating stand of the work piece.

The Blastman B12S robot applications include: railway rolling stock, all kinds of steel structures and castings.

Blastman B12S

Robot configuration

		Range	Max. speed	Type
Axis 1	Main frame horiz.	3 - 50 m	0,3 m/s	Lin.
Axis 2	Shoulder	145°	20°/s	Rot.
Axis 3	Arm head	360	180°/s	Rot.
Axis 4	Nozzle	270	215°/s	Rot.
Axis 5	Rotating stand			Ext.

Operation modes

Manual (external contr. cabin)
Automatic
Parameter based automatic

Operational param.

Nozzle diam.	6 - 19 mm
Nozzle diam.	1/4" - 3/4"
No. of nozzles	1 or 2
Air pressure	4 - 11 bar
Air pressure	50 - 150 psi
Cleaning rate	....200 m²/h
Cleaning rate	....2150 ft²/h

Teaching methods

Teach In (option with ext. cabin)
PTP
Offline (option)
Parameter based (option)

Technical

Voltage	380-500V 50/60Hz
Contr. voltage	24 VDC
Sealing *	IP65
Assembly	Wall mounted
Weight **	1500 kg

* Appl. to electrics in the blast room
** Depends on height

Options

Control
- License for software updates
- Offline teaching
- VPN connection for remote diagnosis and SW updates
- Mobile monitoring
- Control of the rotating units
- Control of blast room machineries

Blast equipment
- Complete operational blast room
- Blast pot for robot
- Blast hoses
- Blast hose connectors
- Blast nozzles

Other
- Rails for the robot
- Warranty extension
- Installation services

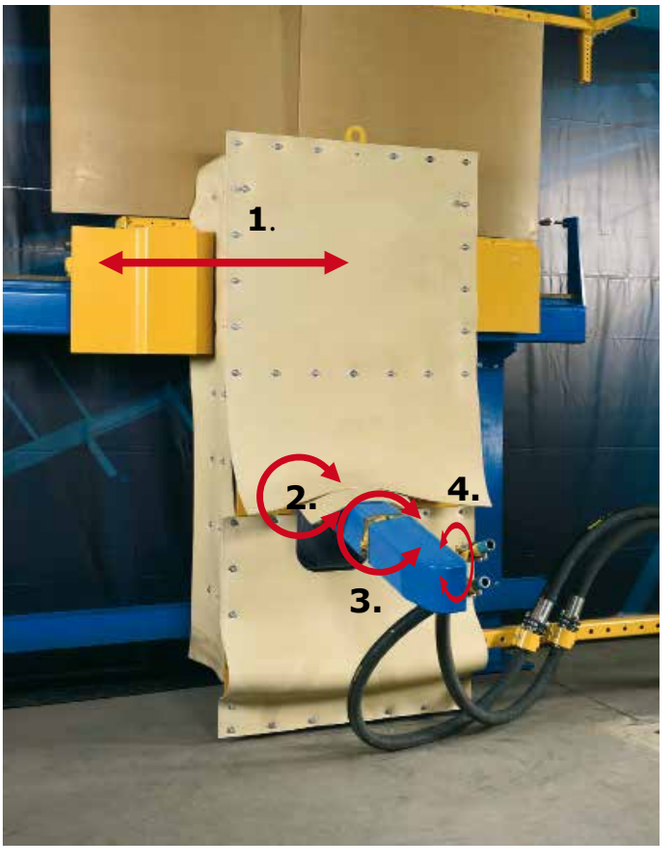

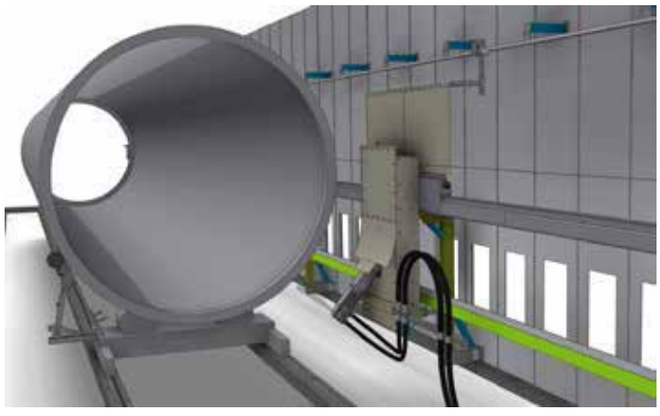

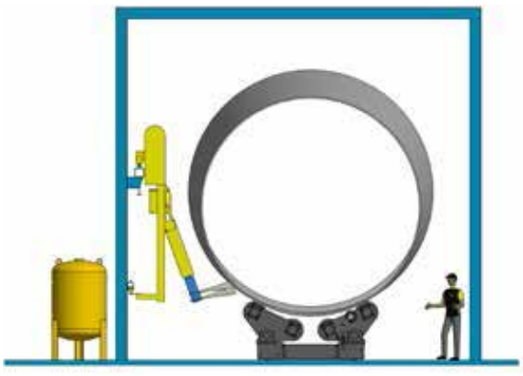

6

Built for blasting

The Blastman B20LW is a gantry-type robot with six (6) axes. The robot's overhead crane type design allows the robot to move all around the workpiece and blast clean it from all sides. The robot arm is moving along a vertical beam allowing blasting at the top and bottom of the workpiece. The simple design of the B20LW makes it easy to maintain and very reliable.

The dimensions of the B20LW are always customized to match the size of the blast room and to meet the requirements of the workpiece. The small size of the robot makes it ideal for narrow blast rooms, that cannot house a larger traditional blasting robot.

Blastman B20LW robot applications include: railway rolling stock, all kinds of steel structures and castings.

Blastman B20LW

Robot configuration

		Range	Max. speed	Type
Axis 1	Robot bridge longitudinal	5-100 m	0,3 m/s	Lin.
Axis 2	Arm carriage across	3-35 m	0,25 m/s	Lin.
Axis 3	Rotation of the telescope	360°	18,7°/s	Rot.
Axis 4	Arm vertical	2-6 m	0,26 m/s	Lin.
Axis 5	Arm head	360°	180°/s	Rot.
Axis 6	Nozzle	270°	215°/s	Rot.

Operation modes

Manual (external contr. cabin)
Automatic
Parameter based automatic

Operational param.

Nozzle diam.	6 - 19 mm
Nozzle diam.	1/4" - 3/4"
No. of nozzles	1 or 2
Air pressure	4 - 11 bar
Air pressure	50 - 150 psi
Cleaning rate	....200 m²/h
Cleaning rate	....2150 ft²/h

Teaching methods

Teach In (option with ext. cabin)
PTP
Offline (option)
Parameter based (option)

Technical

Voltage	380-500V 50/60Hz
Contr. voltage	24 VDC
Sealing *	IP65
Assembly	Wall mounted
Weight **	5100 kg

*Appl. to electrics in the blast room
** Depends on height

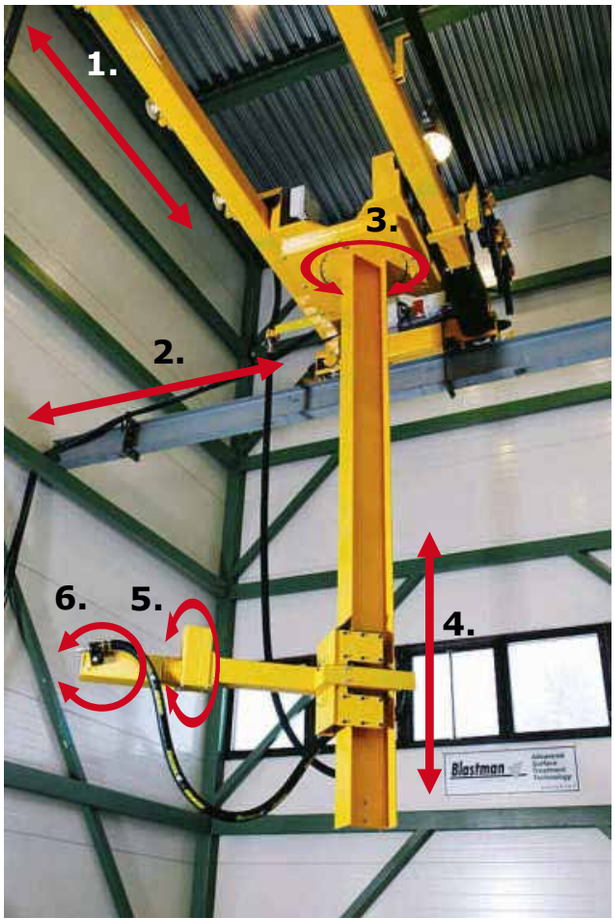

Options

Control
- License for software updates
- Offline teaching
- VPN connection for remote diagnosis and SW updates
- Mobile monitoring
- Control of blast room machineries

Blast equipment
- Complete operational blast room
- Blast pot for robot
- Blast hoses
- Blast hose connectors
- Blast nozzles

Other
- Rails for the robot
- Transfer car for the work piece
- Warranty extension
- Installation services

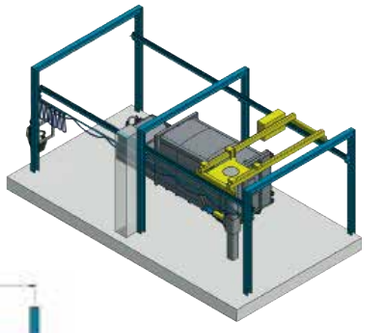

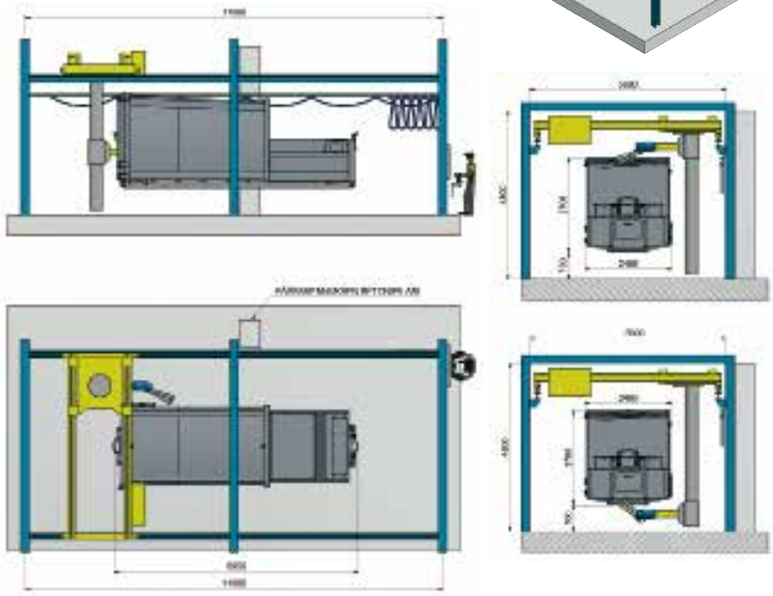

Built for blasting

Blastman MBU is a movable blasting robot/manipulator, which provides very high cleaning power with large blasting nozzles.

The smart operating interface and drive mechanism
Blastman MBU provides excellent flexibility for your blasting application.

Operator, who is sitting in the air conditioned and ergonomically engineered operator cabin, controls the blasting and movements of the Blastman MBU by means of joy sticks and operation touch screen.

Robot configuration / horizontal boom

		Max. move	Max. speed	Type
Axis 1	Vehicle drive	configurable	0,6 m/s	Lin.
Axis 2	Vehicle turn (both axles)	+-30°	5,5°/s	Rot.
Axis 3	Linear movement	13000 mm	0,4 m/s	Lin.
Axis 6	Nozzle	65°	180°/s	Rot.

horizontal boom

Weight	1200 kg
Lenght	800 mm
Width	7000 / 13000 mm
The extensions to the boom	3000 mm
Height	1500mm

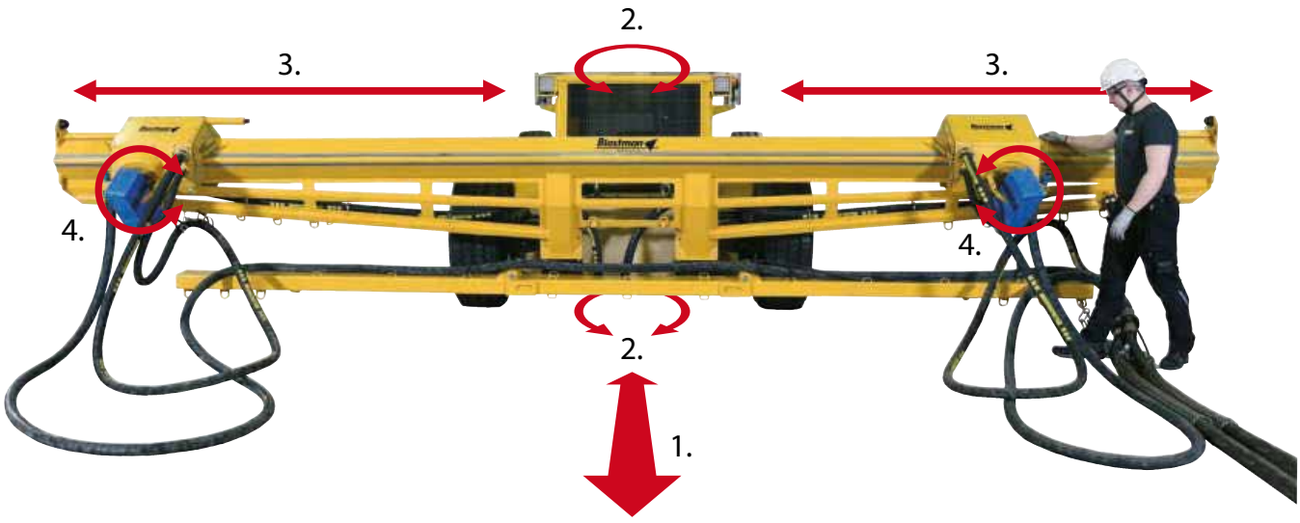

Robot configuration / arm

		Max. move	Max. speed	Type
Axis 1	Vehicle drive	configurable	0,6 m/s	Lin.
Axis 2	Vehicle turn (both axles)	+-30°	5,5°/s	Rot.
Axis 3	Linear movement	13000 mm	0,4 m/s	Lin.
Axis 4	Arm rotation	180°	25,5°/s	Rot.
Axis 5	Shoulder	175°	21,5°/s	Rot.
Axis 6	Elbow	225°	19,9°/s	Rot.
Axis 7	Arm head	360°	180°/s	Rot
Axis 8	Nozzle	270°	215°/s	Rot.

Vehicle

Weight	4100 kg
Lenght	5000 mm
Width	2600 mm
Height	1700mm

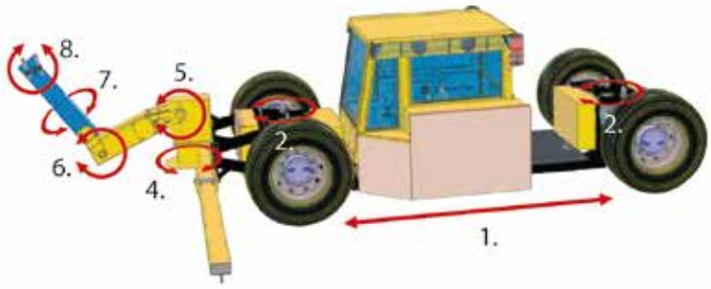

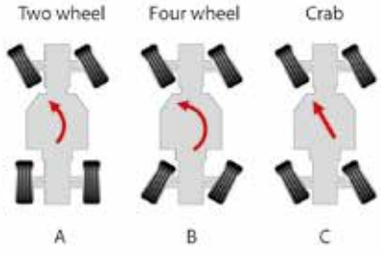

Operation modes

Manual
Automatic
Parameter based automatic

Teaching methods

Teach In (option)
PTP (option)
Offline (option)
Parameter based (option)

Operational param.

Nozzle diam.	16 - 19 mm
Nozzle diam.	1/4" - 3/4"
No. of nozzles	1 or 2
Air pressure	4 - 11 bar
Air pressure	50 - 150 psi
Cleaning rate	....200 m²/h
Cleaning rate	....2150 ft²/h

Technical

Voltage	380-500V 50/60Hz
Contr. voltage	24 VDC
Power supply	80 Amp
Sealing *	IP65
Assembly	On wheels

YouTube

Built for blasting

In order to serve our customers with their blasting applications we have developed supporting machines and systems for blast rooms. It is often quite a challenge to move objects into a blast room and cleaned objects out from a blast room - we have therefore developed a product family of transfer cars for different loads. Blastman Transfer Cars operate reliably and accurately even if the object is standing on the car during the blasting process.

One our most popular models has been the adjustable pair of transfer cars, which can be adjusted according to the dimensions of the work piece.

Blastman Transfer Cars

Technical

		Range	Max. speed	Type
Axis 1	Longitudinal	3 - 100 m	0,3 m/s	Lin
Axis 2	Rotation (optional)		20°/s	Rot.

Operation modes

Manual by push buttons
External outside the blast room

Operational param.

Max load/unit: 60t
Max load/pair: 120t

Technical

Voltage	380-500V 50/60Hz
Contr. voltage	24 VDC
Sealing *	IP65
Assembly	On the rails
Weight **	

* Appl. to electrics in the blast room
** Depends on load

Options

Control
- Electrical drives
- Hydraulic drives
- Wireless control
- Positioning
- Linked into line automation

Other
- Rails for the transfer car robot
- Warranty extension
- Installation services

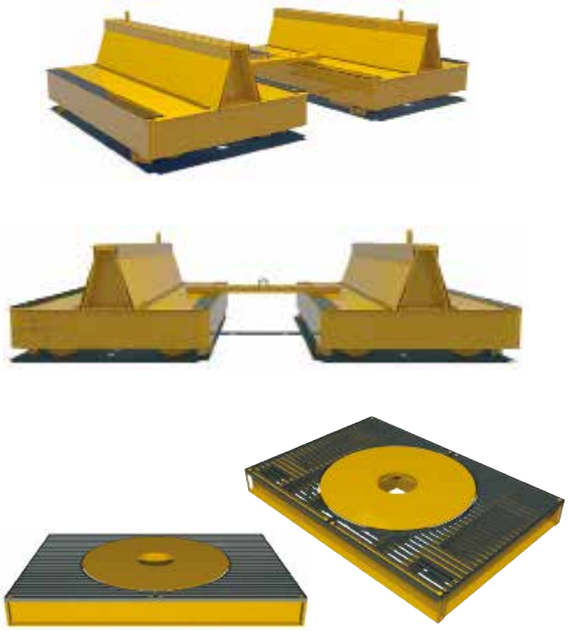

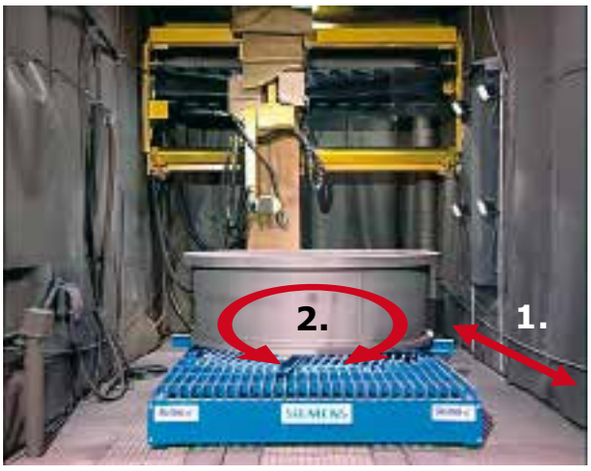

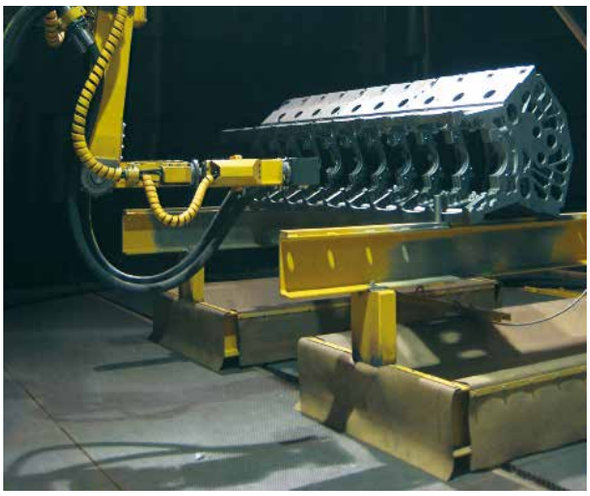

6

Blastman Robotics Ltd.

World leader in the supply of reliable and advanced robotic abrasive blast-cleaning systems

Blastman Robotics Ltd has over 30 years experience in delivering tailored applications for road and rail transport, foundries, wind power and energy, diverse steel structures, aerospace and much more.

Our goal is to provide our customers with exceptional added value

…through innovative and tailored solutions, which combine greater efficiency, reliability and flexibility, unsurpassed quality and greatly improved safety. These pioneering solutions are based on the strongest possible commitment to ongoing learning, exploration and development, enabling us to adapt to and meet new challenges.

Maintaining your chosen system throughout the entire life of the facility and supporting your company's changing needs, Blastman Robotics Ltd takes pride in being your dedicated, supportive and reliable partner.

From rail rolling stock to aerospace, Blastman's advanced robotic solutions are by far the most economical and reliable business choice.

Easy to use and teach

Blastman robots are extremely easy to use. They can be controlled manually, using two joysticks, where as other functions are available through a user-friendly touch screen.

Teaching of the robot is carried out by controlling the robot manually and recording the run. There are also other teaching methods, such as point-to-point and offline, available as optional features.

Product	Page
RC-Line - Roller Coveyor	
Type 15.410	164
Type 25.610	164
Type 33.810	164
Type 45.1010	164
SH-Line - Spinner Hanger	
Type SH376	165
Type SH376E	165
Type SH378	165
Type SH378E	165
Type SH3710	165
Type SH3710E	165
Type SH3720	165
Type SH3720E	165
Type SH3730	165
Type SH3750	165
TB-Line - Tumble Belt	
Type TB32-6	166
Type TB32-10	166
Type TBR32-10	166
Type TB15GN	166
Type TB28GN	166
MR-Line - Multiple Rotating	
Type MR383/483	167
Type MR385/485	167
Type MR4810	167
Type MR583	167
Type MR585	167
Type MR5810	167
Type MR588	167
HP-Line - Hanger Pass-through	
Type HP20H	168
Type HP50H	168
Type HP3740H	168
Type HP3720H	168
Type IPB700	168
Type IPB1000	168
Type IPB1500	168

PB-Line - Pipe Blasting	
Type OPB100	169
Type OPB720	169
Type OPB1200	169
Type OPB1500	169
Type OPB2800	169
Type IPB100	169
Type IPB700	169
Type IPB1000	169
Type IPB1500	169
TT-Line - Trolley Type	
Type TT36-5C	170
Type TT36-10	170
Type TT36-20	170
Type TT76-5C	170
Type TT76-10	170
Type TT76-20	170
Type TT76-30	170
RS-Line - Round Spring	
Type RS265	171
Type RS2615	171
Type RSES1422	171
TP-Line - Turning Plate	
Type TP3512	172
Type TPF3512	172
Type TPF3525F	172
MB-line - Mesh Belt	
Type MB1000/4	173
Type MB1000/8	173
Type MB1250/4	173
Type MB1250/8	173

RC-Line Shot Blasting Machines

The RC-line roller conveyer machines available in in 3 different versions. The S (Standard) & H (Heavy Duty) are shot blasting machines designed to process plates, sections, angles, pipes and others. Industries are shipyard, steel structure companies, steel stock holders, machine builders. The S & H version machines can be carried out with a pré heater, automatic painting unit and dryer.

The C (Construction) machine is specially designed for post -fab structural components to be used in industries such as shipyard, automobile, motorcycle, bridge, machine and others to be used in industries such as steel structure, machine builders, shipyards and subcontracters.

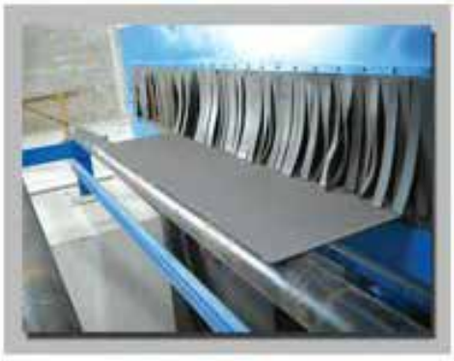

Type	S/H/C 15.410	S/H/C 25.610	S/H/C 33.801	S/H/C 45.1010
Effective cleaning width (mm)	1500	2500	3300	4500
Room feed-in size (mm)	1550×600	2600×600	3400×600	4600×600
Length of workpiece (mm)	1200-12000	3000-12000	2400-12000	4500-18000
Speed of wheel conveyer (stepless speed variation in mtr./min.)	0.5-4	0.5-4	0.5-4	0.5-4
Beam size reference (mm)	1000×300	1300×300	2 x 800×300	2 x 1000×300
Quantity of shot blasting (kg./min.)	4 x 250	6 x 250	6 (8) x 360	8 x 360
First enclosed quantity (kg.)	4000	4500	8000	11000
Roll brush adjusting height (mm)	600	600	600	600
Filter capacity (m^3/hr.)	8000	12000	16000	24000
Exterior size (mm)	15200×5370 ×6797	31200×8070 ×7500	44042×6385 ×7758	45000×7830 ×11117
Power (except for dust cleaning) (kw)	113.5	204.8	224.55	293.6

All machine types are available in S (Standard), H (Heavy Duty) and C (Construction) version.

SH-Line Shot Blasting Machines

The SH-Line is compact in design, does not require a pit, and consists of units featuring single hook, double hook, lifting and non-lifting style designed to blast all kind of foundry parts, structural components, non-ferrous alloy parts.

Type	Model	Cleaning workpiece size (diameter x height)	Carrying capacity per unit hook (kgs.)
SH376	Single-hanger	800×1200	600
SH376E	Double-hanger	800×1200	600
SH378	Single-hanger	1000×1500	800
SH378E	Double-hanger	1000×1500	800
SH3710	Single-hanger	1200×1500	1000
SH3710E	Double-hanger	1200×1500	1000
SH3720	Single-hanger	1500×2000	2000
SH3720E	Double-hanger	1500×2000	3000
SH3730	Single-hanger	1500 x 2000	3000
SH3750	Double-hanger	2000×2500	5000

TB-Line Shot Blasting Machines

The TB15GN, TB(R)32 and TB28GN machines can be used to remove sand and rust from cast, forged and welded parts as well as aluminum and other non-ferrous parts. This series is especially effective for hard-to-clean parts, non-fragile parts, and non-core castings. These machines are also available in full automation.

Type	TB326	TB3210	TBR3210
Productivity (T/h)	0.6 - 1.2	3 - 5	1.5 - 2.5
Loading weight (kg)	200	800	600
Max. weight of one piece (kg)	10	15	30
Diameter of roller (mm)	650	1000	1000
Available capacity (m^3)	0.15	0.4	0.3
Pill impelling volume (kg/min)	100	250	250
Dedusting air volume (m^3/h)	2200	6000	5000
Power dissipation (kw)	12.6	32.6	24.3
Appearance dimension (mm)	3681 x 1650 x 5800	3644 x 2926 x 5856	3972 x 2600 x 4768
Total weight (kg)	2340	5843	7400

Type	TB15GN	TB28GN
Size of roller (mm)	1090 x 1245	1245 x 1778
Diameter of roller (mm)	1092	1250
Working cubage (m^3)	0.43	0,79
Max. weight of one piece (kg)	227	363
Max. size of one piece (mm)	1000	1000
Loading weight (kg)	800	3500
Pill impelling volume (kg/min)	480	340 x 2
Impeller head power (kw)	22	30

MR-Line Shot Blasting Machines

The MR38 & MR48 are Multiple-Step Rotating Point machines featuring overhead rail and continuous duty operation.

These machines can be used to clean rust and sand from casting and work pieces to be fitted to vehicles such as bolsters and side frames, as well as other types of steel structure and mechanical parts.

These machines can be integrated in wet and powder paint lines and are very efficient and low cost maintenance.

Type	MR383 / MR483	MR385 / MR485	MR4810
Cleaning workpiece size (dia in mm)	800 x 1200	1000 x 1500	1000 x 2500
Number of workpiece position	2	2	2
Quantity of impeller head	4	4	6
Impeller head volume (kg/min)	4 x 250	4 x 250	6 x 250
Impeller head power (kw)	4 x 15	4 x 15	6 x 15
Max. hanging weight (kg)	300	500	1000
Productivity hanger (/h)	30 - 60	30 - 60	40 - 60
Cleaning workpiece size (mm)	7680 x 2000 x 2900	7680 x 2000 x 2900	7680 x 2000 x 3800
Total Air rate volume (m^3/h)	17000	19000	19000
Power (except for dust cleaning) (kw)	73.15	73.15	114.72

Type	MR583	MR585	MR5810	MR588
Cleaning workpiece size (dia in mm)	800 x 1500	800 x 1200	1300 x 2800	550 x 2200
Number of workpiece position	2	3	2	2
Quantity of impeller head	4	6	6	4
Impeller head volume (kg/min)	4 x 250	6 x 360	6 x 330	4 x 480
Impeller head power (kw)	4 x 15	6 x 22	6 x 22	4 x 22
Max. hanging weight (kg)	300	500	1000	800
Productivity hanger (/h)	40	55	50	30
Cleaning workpiece size (mm)	3062 x 1800 x 2800	8500 x 1800 x 3885	8500 x 2300 x 4800	6800 x 2600 x 3325
Total Air rate volume (m^3/h)	16000	18000	18000	17200
Power (except for dust cleaning) (kw)	74.5	186.85	186.85	121.05

HP-Line Shot Blasting Machines

The HP-line Shot Blasting Machines are designed for mono hanger rails for heavy duty construction. industries as agriculture, automotive, steel structures, very useful for full automated production plants.

All machines can be integrated in wet and powder paint lines and are also available in custom build versions.

Type	HP20H	HP50H	HP3740H	HP3720H
Exterior size of cleaning casting (mm)	5880 x 3185 x 957	4000 x 3270 x 1320	2500 x 4650	2000 x 3200
Type of impeller head	XQH400	XQH400	XQH350	XQH350
Power (kw)	8 x 18.5	8 x 18.5	8 x 15	12 x 11
Quantity of shot blasting (kg/min)	8 x 280	8 x 280	8 x 250	8 x 250
Power (except for dust cleaning) (kw)	187.4	187.4	148.3	168.3
Total Air rate volume (m^3/h)	30000	30000	19000	19000
External dimension (mm)	18000 x 8150 x 11300	21000 x 7000 x 11509	14000 x 6200 x 7500	19000 x 7200 x 7080

PB-Line Shot Blasting Machines

The PB-Line Shot Blasting Machines (inner & outer) are suitable for the surface treatment of internal pipe and related products, available in different sizes for various industries such as oil & gas, steel stockholders and food industry.

Due to the high power turbines (45 Kw) on these machines we are capable to work in high production plants. The transport system makes it possible to work with various sizes in the proces.

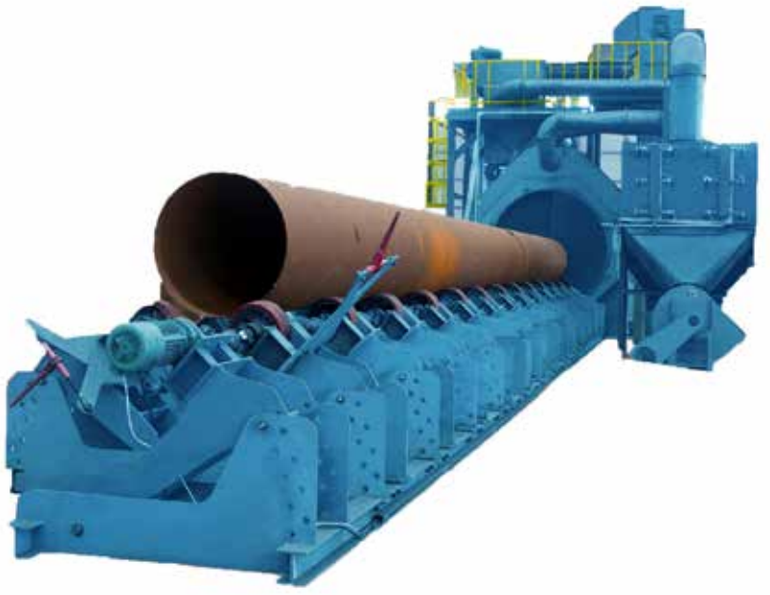

Type	Cleaning size (diameter in mm)	Cleaning speed (mtr/min)	Purposes
OPB100	50 - 300	2 - 10	Outer wall of shot blasting machine
OPB720	159 - 720	2 - 6	
OPB1200	219 - 1016	1 - 6	
OPB1500	325 - 1600	1 - 6	
OPB2800	1016 - 2800	1 - 2	
IPB100	50 - 300	1 - 4	Inner wall of shot blasting machine
IPB700	325 - 720	1 - 2	
IPB1000	720 - 1016	1 - 4	
IPB1500	1016 - 1500	1 - 4	

TT-Line Shot Blasting Machines

The TT-Line, TT36 & TT76 are designed to blast clean middle and large sized work pieces rotating on a trolley providing a bright and profiled surface, designed for heavy industries.

Type	TT365C	TT3610	TT3620	TT765C		TT7620	TT7630
Cleaning workpiece size (mm)	2500 x 1300	2500 x 1500 x 280	4000 x 3000 x 700	2500 x 1300	2500 x 1500 x 280	4000 x 3000 x 700	4000 x 2000
Blasting capacity (kg/min)	2 x 260	4 x 250	4 x 250	2 x 260	4 x 250	4 x 250	4 x 250
Lifting capacity of elevator (t/h)	40	60	75	40	60	75	60
Separation quantity of separator (t/h)	40	60	75	40	60	75	60
Ventilation volume (m^3/h)	13200	240000	21000	13200	240000	21000	21500
Power (except for dust cleaning) (kw)	39.2	186.45	185.25	39.2	188.45	185.25	83.2
External dimension (mm)	9000 x 4200 x 9290	14900 x 500 x 8700	16900 x 6540 x 10020	9000 x 4200 x 9290	14900 x 500 x 8700	16900 x 6540 x 10020	9168 x 7680 x 10874

RS-Line Shot Blasting Machines

The RS265, RS2615, and the RSES1422 Round Spring shot blasting machines have been specifically designed to acheive the perfect result when blasting round springs. Round springs offer a unique blasting challenge - complete blasting coverage is vital in the critical environment in which the springs operate. Positioning of the blast wheels is crutial in achieving the desired result.

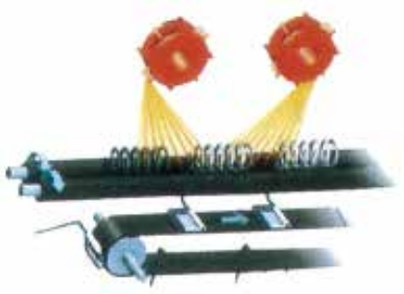

Type	RS265	RS2615	RS1422
Maximum size of cleaning work	Gear wheel Φ1500×1700 Inner gear Φ400×2000 Height 200-500	Gear wheel Φ 3000×1500 Inner gear Φ 400×2500 Height 200-500	Diameter 50-300 Length: ≤ 700
Diameter of revolving table (mm)	1500	3000	-
Diameter of small movement revolving table (mm)	500	1000	-
Carrying capacity of revolving table (kg)	5000	15000	-
Power of shot blasting (kw)	3 x 18.5	3 x 18.5	30
Mobile impeller head power (kw)	1 x 18.5	1 x 18.5	-
Quantity of shot blasting (kg/min)	4 x 280	4 x 280	420
Type of dust catcher (m^3/h)	HR4-16	HR4-32	JZC40
Total air rate volume (m^3/h)	10000	22000	5940
Power (except for dust cleaning) (kw)	107.15	119.3	40.05
External dimension (mm)	9350 x 3750 x 8790	12000 x 5250 x 8750	8230 x 762 x 1752

TP-Line Shot Blasting Machines

The TP-line of Turning Plate shot blasting machines are designed to blast small to medium sized work pieces on a rotating plate. The units can be used to blast many different types of workpiece including forged and cast parts, car wheels and provides a bright and profiled surface. Available in Ferro and non-Ferro performance.

Type		**TP3512**	**TPF3512**	**TPF3525F**
Dimension (diameter) of cleaning chamber (mm)		1350 x 560	1350 x 860	2854 x 560
Cleaning workpiece size (mm)		600 x 250 x 250	600 x 250 x 500	600 x 500 x 250
Turntable car	Loading weight (kg)	400	400	1000
	Diameter (mm)	1200	1200	2500
Wheelblast equipment	Blasting capacity (kg)	200	2 x 120	2 x 250
	Power (kw)	11	2 x 7.5	2 x 15
Lifting capacity of elevator (t/h)		15	15	30
Separation quantity of separator (t/h)		15	15	30
First loading capacity (kg)		400	400	1500
Ventilation volume (m^3/h)		2800	2800	5200
External dimension (mm)		1500 x 3450 x 3780	1900 x 1900 x 4165	4260 x 3647 x 5366
Power (except for dust cleaning) (kw)		24.5	24.5	35.2

MB-Line Shot Blasting Machines

The MB-Line Mesh Belt shot blast machines provide a frequency controlled speed variable mesh belt surface on which a variety of parts can be uniformly blasted. The high quality mesh belt ensures that the work piece remains in the perfect position to be blasted. As each part is blasted in a controlled fashion this technology is perfect for thin-walled parts which could be damaged when impacting other parts (for example inside a tumble blasting machine). Capable of fully automatic operation the MB-Line machines are the perfect shot blasters to improve the quality and consistency of your castings, forgings, or other small parts.

Type	MB1000/4	MB1000/8	MB1250/4	MB1250/8
Net width	1000 mm	1000 mm	1250 mm	1250 mm
Max. load capacity	1200 kgs	1200 kgs	1200 kgs	1200 kgs
Max. workpiece weight	100 kgs	100 kgs	100 kgs	100 kgs
Max. workpiece section size	1500 x 500 mm	1500 x 500 mm	1500 x 500 mm	1500 x 500 mm
No. of blasting wheels	4	8	4	8
Dust air volume	15000 m^3/hr.	15000 m^3/hr.	15000 m^3/hr.	15000 m^3/hr.
The total power	97.5 KW	97.5 KW	97.5 KW	97.5 KW

Notes

Section 8 - Material Handling

Product	Page
AIRVAC Portable vacuum recovery system	176
AIRVAC with cyclone separator	177
ABVAC Mobile vacuum recovery system	178
AB710 Heavy duty recovery & cleaning system	179
ABVR Mobile vacuum recovery system	180
RC-50-20 Grit recycling system	181
RC-50-150 Grit recycling system	182
RC-80-160 Grit recycling system	184
Can crushers	186

AIRVAC Portable Vacuum Recovery System

The Airblast AIRVAC is a robust, compact, highly efficient, pneumatic recovery unit.

Features
The Airblast AIRVAC is capable of recovering spent abrasives or any other form of solid materials, ranging in size up to 20 mm over a distance of up to 30 metres. The unit is fully air operated and only requires 250 cfm of air at 85 psi pressure (7 m3/min. at 5.8 bar). No other form of power is required to operate the unit. A simple modification converts the AIRVAC into a ventilation unit for ducting air from tanks etc.

Accessories
A full range of accessories are available, such as suction and material conveying hoses suitable for conveying all bulk materials and blasting media. Reinforced and flexible hose for light cleaning. PVC vacuum hose for industrial cleaning. Light rubber hose for the suction of abrasive materials and durable rubber hose for heavy duty suction and retrieval. In addition a full range of couplings, connectors, suction hose manifolds compliment the range.

ORDERING INFORMATION **AIRVAC MARK III Assembly**	
Part no.	3064000
Weight	27 kgs.

AIRVAC Optional Accessories	
Part no.	**Description**
2183000	2½” (62 mm) antistatic flexible plastic hose
2184000	4” (100 mm) antistatic flexible plastic hose

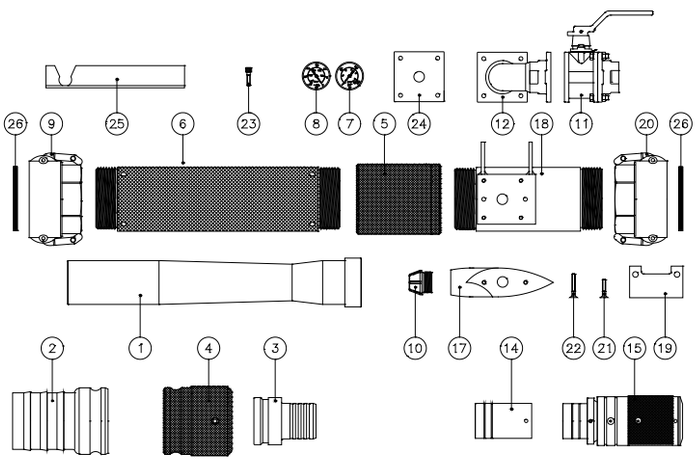

AIRVAC Parts List			
Item	**Part no.**	**Description**	**Qty**
01	3065000	AV-1 Venturi tube	1
02	3066000	AV-2 Discharge hose coupling	2
03	3067000	AV-3 Suction hose coupling insert	1 p
04	3068000	AV-4 Suction hose coupling	2
05	3069000	AV-5 Mixing chamber	1
06	3070000	AV-6 Venturi sheath	1
07	3071000	AV-7 Pressure gauge	1
08	3072000	AV-8 Vacuum gauge	1
09	3073000	AV-9 Discharge coupler	2
10	3074000	AV-10 Nozzle	2
11	3075000	AV-11 Air valve	1
12	3076000	AV-12 Manifold assembly	4
13	3077000	AV-13 Pump assembly (body with aerofoil fitted)	1
14	3078000	AV-14 Restrictor	1
15	3079000	AV-15 Gulper (adjustable)	1
16	3080000	Dust collector door handle	4
17	3081000	AV-17 Aerofoil	4
18	3082000	AV-18 Body	2
19	3083000	AV-19 Leg bracket	1
20	3084000	AV-20 Body coupler	1
21	3085000	AV-21 Location screw - short (2 p/set)	1
22	3086000	AV-22 Location screw - long (2 p/set)	1
23	3087000	AV-23 Manifold screw (4 p/set)	1
24	3088000	AV-24 Manifold gasket	1
25	3089000	AV-25 Nozzle key	1
26	3090000	AV-26 Seal ring (camlock)	1

AIRVAC with Cyclone Separator

The Airvac with Cyclone Separator is a compact air-operated abrasive vacuum system that recovers abrasives for recycling. It is both efficient and cost effective.

Vacuum Recovery System
Incorporating the Airvac as the prime mover, it can produce above 14" Hg of vacuum when connected to an air supply of 250 cfm at 7 bar (100 psi). At these levels 3-5 tonne per hour recovery rates can be attained.
With just two units, a hopper/cyclone and a dust collector, the unit is flexible, extremely robust and easy to use, with the performance of larger more expensive machines. The system will in fact recover solids up to 50mm (2") in diameter over distances in excess of 100 metres, dependent upon particle size, type of material, volume and pressure of air supply.
Maintenance and operator attention is reduced to a minimum, as the Airvac has only one moving part. With no electrical power required, there's no risk of fire or explosion, particularly important in inflammable areas. The system conforms to all health and safety at work acts, particularly in respect of the lower noise levels – 83db at 2 metres.

Method of Operation
All material is recovered through the gulper suction head and is drawn via the rubber lined hose into the cyclone.
The vortex created in the cyclone separates the very fine dusts from the heavier particles which fall, under gravity, into the hopper.
A dump valve on the hopper is operated by an adjustable timer which can be set to suit the rate of recovery.
All material dust travels along the flexible intermediate hose to the filter box. Inside the box the 18 filter socks collect the dust as the airstream passes through.
Clean air is discharged through the JetPump each time the machine stops by reverse pulsing into the dust compartment situated at the bottom of the filter box.

Technical Specification

Power Source	: Compressed air – 250CFM @ 7 bar (100PSI).
Suction Hose	: 2½" I.D.
Recovery Rate	: 3 to 5 tonne per hour of expendable media dependent on hose lengths.
Weight	: 600 kgs.
Filtration	: Cyclonic primary filter with a 18 sock PNF dust collection system.

ABVAC Mobile Vacuum Recovery System

ABVAC is an electric-powered suction unit mounted onto a rigid stand equipped with retractable legs. The unit is designed for the collection of anything from dust up to 50mm debris into a big bag and is ideal for both mobile use and for fixed installations. The unit can also be combined with an abrasive storage hopper to allow recovered abrasive to be reused.

The retractable legs make it easy to move around and they allow the discharge outlet height to be adjusted to fit any size of big bag. It's transportability means that the unit is mostly used as a free-standing suction unit with the connection of a 3" or 4" hose. However, it is also suitable for fixed installations connected to a fixed installed pipe system with multiple suction outlets.

Optimal Solution

As the unit is designed and equipped with an outlet for connecting a big bag, it can be used without a separate drop out box. The unit requires no compressed air and offers huge airflow per kW. The high suction capacity, together with its flexible discharge system, makes the unit very useful in most grit recovery situations.
Due to its flexibility, the ABVAC unit gets access to most areas where cleaning needs to be carried out, increasing media recovery rates usually limited by long runs of hose. The unit is easily manoeuvred using a standard forklift truck or crane.

Why ABVAC

- Automatic big bag filling of collected material.
- CEE power intake for 32 or 63 A respectively.
- Filter system for dry and moist material.
- Automatic ATM filter cleaning system, without compressed air.
- Easy height adjustment to suit various big bags.
- Improved safety and lower labour costs.
- Various options of safety filters.

Available with a wide range of flexible hoses, tools and extensions.

Model	ABVAC 165	ABVAC 165	Optional Abrasive Silo
Weight, kg (empty)	1130	1130	Various sizes and capacities available.
Max Vacuum, mbar	290	400	
Max. Air Volume m^3/h (unloaded)	1100	1100	
Electrical Motor, kW	16,5	25	
Voltage Frequency, V/Hz	400/50	400/50	
Filter surface, m^2	10	10	
Noise Level dB(A) (1 m/5 m distancea)	75/70	75/70	
Dimension dust inlet, dia mm	108	108	

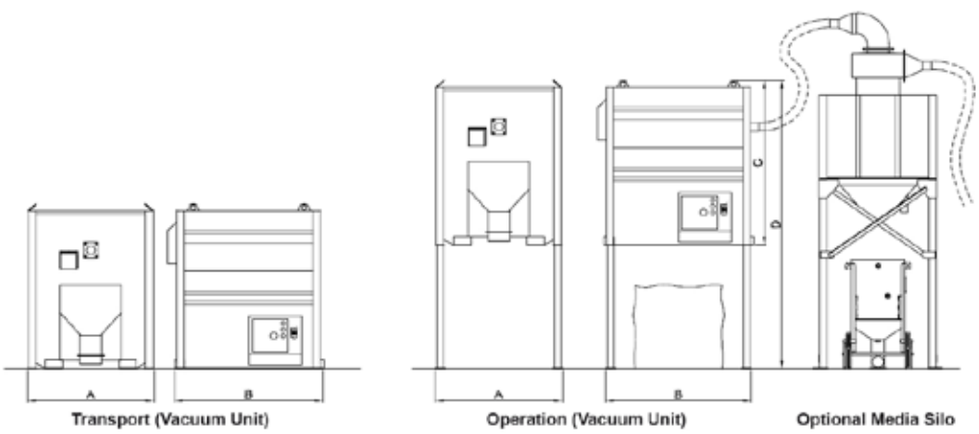

Transport (Vacuum Unit) Operation (Vacuum Unit) Optional Media Silo

AB710 Heavy Duty Recovery & Cleaning System

This robust and extremely powerful system is designed for the recovery of blasting shot. Equipped with automatic pneumatic pinch valve and automatic self-cleaning NCF filter. Most of the dust is separated from the blasting shot or from the collected granulates. The dust is channelled into its own container, while the blasting shot or granulated material is fed back into the blasting pot, onto conveyors or into other containers.

Features

- ◇ Extremely high vacuum for suction of heavy material over long horizontal and vertical distances
- ◇ Dust separation from collected granules and grit
- ◇ Automatic filter cleaning and silo discharge

Applications:

- ◇ Cleaning of floors
- ◇ Cleaning of machines
- ◇ Cleaning of blasted area
- ◇ Removing of abrasive

TECHNICAL DATA	METRICAL	IMPERIAL
Max. vacuum	7800 mm WC	307 in WC
Max. air flow	318 Nm³/hr	187 cfm
Compressed air consumption	5,3 Nm³/min	187 cfm
Compressed air pressure	700 kPa	7 bar
Noise level	75 dB(A)	-
Main filter:	43162001	-
Main filter area:	3,15 m²	33,9 sq.ft
Main filter approval category:	H12	-
Main filter type:	NCF	-
Main filter material:	PET w/membrane	-
Main filter cleaning method:	Pressurized air	-
Container gros volume:	67 + 220 litres	17,7 + 58,1gallon
Container practical volume:	67 + 220 litres	17,7 + 58,1gallon
Standard suction inlet diameter:	63 mm	2,5 inches
Standard suction hose diameter:	63 mm	2,5 inches
Standard suction hose length:	10 metres	32,8 feet
Standard suction hose quality:	PUR	-
Length x Width x Height:	1875 x 1000 x 3025 mm	74 x 39 x 119 inches

Note: The vacuum cleaner is fully equipped and ready for immediate use.

ABVR Series Vacuum Recovery System

AIRBLAST

Airblast ABVR series vacuum recovery system is designed to recover spent dry recyclable abrasives from a blasting area into a silo for subsequent return to the blast cleaning equipment or, in the case of expendable abrasives, for disposal into a waste hopper.

After depositing the abrasive into the silo, the vacuum flow containing air and dust continues on to the suction unit, where the dust particles in this stream are removed by high performance filter cartridges prior to exhausting air to atmosphere.

The VRS is of strong construction with sturdy maintenance access doors and contains the filter section fitted with safety relief valve and automatically sequenced reverse pulse-jet filter cleaning system, motor compartment housing an electric drive motor and a vacuum pump complete with exhaust silencer. This unit is also fitted with an electric control panel.

The VRS is designed to meet present and proposed environmental. Dust emission (max. 5 mg pr. m^3 air).

A feature of AIRBLAST ABVR series vacuum recovery system is the capability to vacuum clean any residual dust and abrasive particles from the blast cleaned surfaces to meet the high specifications laid down in National and International Standards of surface preparation.

SPECIFICATIONS				
Model	**ABVR-90**	**ABVR-75**	**ABVR-45**	**ABVR-30**
Power supply	3-Phase 415/ 50Hz			
Process air volume	3600 CMH	3120 CMH	2640 CMH	1900 CMH
Vacuum pressure	500 mbar			
Drive	V-belt driven			
Rotational speed	1250 rpm			
Electric motor	90 kW IP55 class F	75kw IP55 class F	45 kW IP55 class F	30 kW IP55 class F
Dust filtration	Cyclone and cartridge dust collector continuous pulse-jet valve			
Over vacuum protection	Vacuum relief valve			
Protection	Wrong phase, overload, dust Level			
Filter cleaning	Periodic reverse air jet			
Filter efficiency	0.05%			
Air cleaning	Oil / water separator @ 6 to 10 bar			
Noise level	85 dB @ 5 m radius scale A			
Vacuum hose size	4” / 5” / 6”	4” / 5”	4”	3”
Machine structure	Open-skit mounted			
Start-stop method	Star-Delta			
Control panel	IP54 overload protection			
Display gauges	Running amperes, vacuum			
Recommended silo	8 tons	8 tons	5 tons	4 tons
Weight	approx 5000 kgs.	approx 4500 kgs.	approx 3000 kgs.	approx 2650 kgs.
Dimensions	3.45 x 2.25 x 2.5 mtr.	2.67 x 2.2 x 2.12 mtr.	2.4 x 1.9 x 1.9 mtr.	2.0 x 1.6 x 1.9 mtr.
Recovery rate	Up to 10 tons/hr, 40m vertical (suction), 15m horizontal (machine to silo)	Up to 8 tons/hr, 30m vertical (suction), 15m horizontal (machine to silo)	Up to 5 tons/hr, 25m vertical (suction), 15m horizontal (machine to silo)	Up to 3.5 tons/hr, 20m vertical (suction), 15m horizontal (machine to silo)

RC-50-20 Grit Recycling System

The RC-50-20 is a mobile abrasive recycling machine which can be used inside or outside. Several types of reusable abrasive can be recycled by the RC-50-20, the rate of recycling depends upon the type of abrasive being processed. Used abrasive is manually fed into the intake hopper from where it is collected by the bucket elevator and transported up the funnel. At the top of the funnel the abrasive is poured onto the spreading plate which ensures an even, shallow and wide flow down into the cascade cleaner. Inside the cascade cleaner the larger particles are separated into a dust bag, and the smaller particles are extracted by a separate cartridge filter which features solenoid controlled automatic pulse cleaning. Depending upon which abrasive is being recycled the unit can be adjusted to ensure that the abrasive flow and particle separation are fine tuned to be as effective as possible. The cleaned abrasive is deposited into a hopper ready for reuse. The unit is manufactured in Europe from 3mm and 5mm steel to the highest quality standards. The motors and gearboxes are sealed and lubricated for life. The unit requires an electrical connection of 400 volts – 50 Hz as well as compressed air.

TECHNICAL SPECIFICATIONS

Dimensions (in standing position):

Height	: 4.000 mm
Width	: 1.500 mm
Depth	: 1.800 mm
Weight (empty)	: 650 kg.

DELIVERY INCLUDES

E 50 ELEVATOR

Total height	: 4.000 mm
Capacity	: 50 liter per minute
Motor power	: 0,75 kW
Electrical power	: 400 Volt, 50/60 Hz.

Made from 2 and 3 mm sheet steel, reinforced with steel profile. Equipped with a motor, gearbox, dust free rolling element, and an inspection hatch.

K 350 CASCADE CLEANER

Height	: 650 mm
Width	: 350 mm

Made from 3 and 5 mm steel plate. The cleaner is mounted between the elevator and the stock silo.

PF 1-L DUSTFILTER (FOR CASCADE CLEANER)

Cartridge Filter with automatic continuous solenoids which activate pulse cleaning. Filter installation made from 3 mm steel plate with sleeve profiles and reinforcements. The filter installation consists of the following components: Undercarriage with preseparator and dust silo with rubber plug valve, Filter cabinet with integrated compressed air filter cartridge and cleaning system and a Fan.

Technical specifications

Exhaust capacity	: 960	m^3/h
Static pressure	: 1,200	Pa
Motor power	: 0.75	Kw
Motor voltage	: 400	Volt-50/60 Hz
Filter cartridge	: 1	pc.
Filter area	: 325 x 15	m^2
Filter material	: polyester nonwoven NA 806	
Max. dust emission	: < 1.5	mg/nm^3
Dedusting	: automatically by compressed air; max. 6 bar	
Valves	: 1	pieces 1½" G
Pulse pressure	: ± 5	bar
Pulse cycle time	: adjustable	
Exhaust pulse	: 1	cartridge equivalent
Noise level	: 78	dBA
Dust extraction	: PVC bag	

S-200 HOPPER

Abrasive silo 200 litre. Made from 3 mm sheet steel, reinforced with steel profile and equipped with a grit valve and closing lid.

ELECTRIC PANEL

Complete with automatic switch controllers, mainswitch, failure lamp and control buttons.

RC-50-150 Grit Recycling System

AIRBLAST

The RC-50-150 is an abrasive recycling system which can be used inside or outside. Several types of reusable abrasive can be recycled by the RC-50-150 into bigbags or blast vessels. The rate of recycling depends upon the type of abrasive being processed.

Operating principle:
Dust laden air enters through the inlet plenum of the collector, where heavy particles fall immediately into the hopper. As the air flows through the filtercartridges, dust is deposited on the outside of the filtering media. The filtercartridges are cleaned automatically and continually without interrupting the operation of the dustcollector. An adjustable timer controls the cycletime. Solenoid valves introduce jets of high-pressure air into the cartridges in turn, through the venturi opening above each cartridge. The resulting reverse airflow cleans the filter cartridges. Dust removed from the filter surface settles into the hopper. As each pair of filter cartridges is cleaned in succession, the remaining stay.

The used abrasive has to be put into the abrasive hopper, then it comes in a regulated flow to the elevator. From the elevator it comes in the rotary sieve, with holes Ø 4, 5 and 6 mm at choice, if the abrasive is polluted with big parts like coating scale, woodchips, glass, etc. these contaminats are separated through the rotating movement of the sieve. The sieve is supplied complete with a dust exhaust connection. After the sieve the abrasive flowis through a cascade system.

The air wash action can be regulated to control the size of the reusable abrasive. Dust and non-usable (to fine) abrasive are automatically discharged and collected in big bags or extracted by the separate filter. The cleaned abrasive will fall into the abrasive silo and is ready to be store into bigbags or into blast vessels.

The system is supplied complete with: crane hooks, inspection covers and flexibel dust-exhaust ducting to the bigbags.

TECHNICAL SPECIFICATIONS

Dimensions (in standing position):

Height	: 4.780 mm
Width	: 2.180 mm
Depth	: 2.180 mm
Weight (empty)	: 3.500 kg
Total electrical power	: 2 kW 400 Volt – 50/60 Hz.
Compressed air	: 5 bar
Capacity silo	: 1.600 Liter
Capacity elevator	: 3.000 Liter/hour

> for garnet this is 2,3 x 3.000 / 1000 = 6.9 ton/hour
> for steel grit this is 4,5 x 3.000 / 1000 = 13.5 ton/hour

DELIVERY INCLUDES

ABRASIVE HOPPER WITH INLET SIEVE

Opening dimensions:	Width approx.	:	700 mm
	Depth approx.	:	500 mm
	Height approx.	:	650 mm

Made of 3 mm. Steel plate complete with sieve and grit regulating system to prevent bucket conveyor overload.

BUCKET ELEVATOR E-50

Gear motor	:	0,75	kW
Capacity	:	50	ltr./min.

Closed dust free bearing system. Special belt with Columbus buckets.

AUTOMATIC SELF CLEANING ROTARY SCREEN TZ-80 (capacity 80 Liter per minute)
Made of 2 mm and 3 mm steel plate, reinforced with profiles. Provided with motor reductor 0,37 kW 400 Volt, dust-closed bearings and an inspection cover.

Abrasive Cleaning: The rotary sieve must be used if the abrasive is polluted with big parts like coating-scale, wood chips, glass, etc.. The contamination is separated through the rotating movement of the sieve. Further, the sieve comes complete with a dust exhaust connection.

RC-50-150 Grit Recycling System

GRIT CLEANING SYSTEM
Consisting of one heavy-duty cascade system with double air wash action of the abrasive, mounted directly onto the outlet of the elevator. Oversized materials are separated by screens in the bucket elevator hopper. Cascade cleaner is connecting with a sucting ducting Ø 180 mm to the filterunit.
The air wash action can be regulated to control the size of re-usable abrasive. The dust and non-useable abrasive (too fine) are discharged automatically and collected in big bags or extracted by the separate filter.

Technical specifications

Exhaust capacity	:	960	m³/h
Total pressure	:	1.200	Pa
Motor power	:	0.75	Kw, 400/690 Volt, 3-Ph, 50 Hz
Filter cartridge	:	1	pc. Ø 325 x 1000 mm
Filter area	:	15	m²
Filter material	:	polyester fabric	
Filter percentage	:	99,9	%
Max. dust emmision	:	< 1,5	mg/nm³
Cleaning	:	continuous by compr. air max. 5 bar	
Solenoid valves	:	1	pcs (1” G)
Cleaning pressure	:	4	bar
Cycle time	:	adjustable	
Sequence	:	1	cartridge simultaneous
Dust collecting bags	:	PVC bag	

ABRASIVE STORAGE SILO 1500 LTR
Silo constructed of 3mm steel plate and profiles complete with abrasive stop and connection for 2 bigbags or 2 blast vessels.

ELECTRIC PANEL
Complete with automatic switch controllers, mainswitch, failure lamp and control buttons.

STEEL FRAME CONSTRUCTION
All components are mounted within a sturdy steel frame complete with crane hooks, so in this case the unit is easy to transport and requires little down-time to set up.
All components are mounted within a sturdy steel frame, so the unit is easy to transport and requires little downtime to set up.

RC-80-160 Grit Recycling System

AIRBLAST

The RC-80-160 is an abrasive recycling system which can be used inside or outside. Several types of reusable abrasive can be recycled by the RC-80-160 into bigbags or blast vessels. The rate of recycling depends upon the type of abrasive being processed.

Operating principle:
Dust laden air enters through the inlet plenum of the collector, where heavy particles fall immediately into the hopper. As the air flows through the filter cartridges, dust is deposited on the outside of the filtering media. The filter cartridges are cleaned automatically and continually without interrupting the operation of the dust collector. An adjustable timer controls the cycletime. Solenoid valves introduce jets of high-pressure air into the cartridges in turn, through the venturi opening above each cartridge. The resulting reverse airflow cleans the filter cartridges. Dust removed from the filter surface settles into the hopper. As each pair of filter cartridges is cleaned in succession, the remaining stays.

The used abrasive has to be put into the abrasive hopper, then it comes in a regulated flow to the elevator. From the elevator it comes in the rotary sieve, with holes Ø 4, 5 and 6 mm at choice, if the abrasive is polluted with big parts like coating scale, woodchips, glass, etc. these contaminats are separated through the rotating movement of the sieve. The sieve is supplied complete with a dust exhaust connection. After the sieve the abrasive flowis through a cascade system.

The air wash action can be regulated to control the size of the reusable abrasive. Dust and non-usable (to fine) abrasive are automatically discharged and collected in big bags or extracted by the separate filter. The cleaned abrasive will fall into the abrasive silo and is ready to be store into bigbags or into blast vessels.

The system is supplied complete with: crane hooks, inspection covers and flexibel dust-exhaust ducting to the bigbags.

TECHNICAL SPECIFICATIONS

Dimensions (in standing position):

Height	: 4.780 mm
Width	: 2.180 mm
Depth	: 2.180 mm
Weight (empty)	: 3.000 kg
Total electrical power	: 2,75 kW 400 Volt – 50/60 Hz.
Compressed air	: 5 bar
Capacity silo	: 1.600 Liter
Capacity elevator	: 4.800 Liter/hour

> for garnet this is 2,3 x 4.800 / 1000 = 11 ton/hour
> for steel grit this is 4,5 x 4.800 / 1000 = 21 ton/hour

DELIVERY INCLUDES

ABRASIVE HOPPER WITH INLET SIEVE

Opening dimensions:	Width approx.	: 700 mm
	Depth approx.	: 500 mm
	Height approx.	: 650 mm

Made of 3 mm. Steel plate complete with sieve and grit regulating system to prevent bucket conveyor overload.

BUCKET ELEVATOR E-80
Gear motor : 1,5 kW
Capacity : 80 ltr./min.
Closed dust free bearing system. Special belt with Columbus buckets.

AUTOMATIC SELF CLEANING ROTARY SCREEN TZ-80 (capacity 80 Liter per minute)
Made of 2 mm and 3 mm steel plate, reinforced with profiles. Provided with motor reductor 0,37 kW 400 Volt, dust-closed bearings and an inspection cover.

Abrasive Cleaning: The rotary sieve must be used if the abrasive is polluted with big parts like coating-scale, wood chips, glass, etc.. The contamination is separated through the rotating movement of the sieve. Further, the sieve comes complete with a dust exhaust connection.

RC-80-160 Grit Recycling System

GRIT CLEANING SYSTEM
Consisting of one heavy-duty cascade system with double air wash action of the abrasive, mounted directly onto the outlet of the elevator. Oversized materials are separated by screens in the bucket elevator hopper. Cascade cleaner is connecting with a sucting ducting Ø 180 mm to the filterunit.
The air wash action can be regulated to control the size of re-usable abrasive. The dust and non-useable abrasive (too fine) are discharged automatically and collected in big bags or extracted by the separate filter.

Technical specifications

Exhaust capacity	:	960	m³/h
Total pressure	:	1.200	Pa
Motor power	:	0.75	Kw, 400 Volt, 3-Ph, 50 Hz
Filter cartridge	:	1	pc. Ø 325 x 1000 mm
Filter area	:	15	m²
Filter material	:	polyester fabric	
Filter percentage	:	99,9	%
Max. dust emmision	:	< 1,5	mg/nm³
Cleaning	:	continuous by compr. air max. 5 bar	
Solenoid valves	:	1	pcs (1" G)
Cleaning pressure	:	4	bar
Cycle time	:	adjustable	
Sequence	:	1	cartridge simultaneous
Dust collecting bags	:	PVC bag	

ABRASIVE STORAGE SILO 1500 LTR
Silo constructed of 3mm steel plate and profiles complete with abrasive stop and connection for 2 bigbags or 2 blast vessels.

ELECTRIC PANEL
Complete with automatic switch controllers, mainswitch, failure lamp and control buttons.

STEEL FRAME CONSTRUCTION
All components are mounted within a sturdy steel frame complete with crane hooks, so in this case the unit is easy to transport and requires little down-time to set up.
All components are mounted within a sturdy steel frame, so the unit is easy to transport and requires little downtime to set up.

Can Crusher

The Airblast Can Crusher crushes all types of metal cans, tins, paint drums and paint pails up to 30 litres, compacting cans up to a sixth of their original size with ease.

This not only offers cost savings on waste skip transport charges to landfill sites but also helps to maintain a safer, tidier workspace.

Once a paint drum to be processed is placed within the can crusher, the joystick is depressed to start the approximate 20 second cycle, during which the door is locked by an automatic safety system.

Containers positioned in the can crusher are automaticaly pierced without removing the lids, alternatively the same devices drain solvent deposits when required for desposal and a removable drip tray catches any paint, oil or other liquids which may be expelled from the container during the crushing cycle.

Features

- ◇ Safe and easy operation
- ◇ No electrical installation required
- ◇ Full height viewing window
- ◇ Robust construction
- ◇ Maintenance free
- ◇ Powder coat finish

TECHNICAL DATA

Overall height	2020 mm
Overall width	665 mm
Overall depth	485 mm
Depth when door open	810 mm
Crusher time cycle	20 seconds (based on a 30 litre pail)
Air requirements	215dm3/cycle @10bar/145psi

ORDERING INFORMATION

Part no.	Description
8985000	Can Crusher 30 ltr.

Can Crusher 5 litre bench top machine and 205 litre drum models also available.

Section 9 - Air Treatment

Product	Page
A-series venturi blowers	188
Jet fans	189
Compressed air aftercoolers	190
DC-6 Mobile dust collectors	191
DC-12 Mobile dust collectors	191
DC-20 Mobile dust collectors	191
DC-12/ATEX Mobile dust collector	192
Air-cooled dehumidifiers - Far East version	193
Air-cooled dehumidifiers - Middle East version	195

A-Series Venturi Blowers

AIRBLAST

Airblast Venturi Air Blowers are a perfect solution for ventilating or extracting hazardous and explosive vapors from tanks, as well as a variety of other functions. Additionally, it can be used to cool down machinery or workers. Its function is to accept high pressure air from a compressor and using the venturi principle create a suction trough the base of the unit. Maximum air pressure: 140 PSI.

Construction:

- Constructed with galvanized steel
- Single piece cast aluminum inlet housing
- Sturdy steel galvanized steel diffuser
- Static ground attached to base of unit
- Steel handle
- Quick coupling inlet connection
- Multiple inlet ports

ORDERING INFORMATION	
Part no.	**Description**
8850002	A-1000 Venturi Blower
8850003	A-1200 Venturi Blower
8850006	A-2900 Venturi Blower
8850008	A-4100 Venturi Blower
8850009	A-6200 Venturi Blower

SAFETY PRECAUTIONS

An electric ground or static ground is attached to the base of all air blowers. When using this air blower in a volatile atmosphere, attach a ground wire to discharge any static electricity, preventing a build-up of static electricity. Airblast pneumatic air blowers have no moving parts and are ideal for venting hazardous areas. The bases are made from a high quality aluminium alloy. Aluminium scraped across rusty steel can sometimes cause a smear. A heavy smear of aluminium on steel (being struck with some object) can cause an incendiary spark. Take precautions not to drag the base on steel tanks, etc.

While there are no moving parts to the air blowers, all of the performance ratings in this brochure are based on a unit that had a clean air reservoir and nozzle jets that are of the proper diameter and not plugged in any way. Care should be taken to prevent clogging of the nozzle jets and a periodic cleaning with a steam cleaner would be appropriate maintenance. Secure the air blower in place prior to turning on the air supply or it may move from its intended position.

AIR FLOW						
	AIR CONSUMED (CFM)			TOTAL AIR FLOW (CFM)		
Model	**60 PSIG**	**80 PSIG**	**100 PSIG**	**60 PSIG**	**80 PSIG**	**100 PSIG**
A-1000	31	41	51	863	1076	1205
A-1200	31	41	51	1135	1308	1465
A-2900	60	81	101	2560	3020	3698
A-4100	108	142	178	4215	4810	5435
A-6200	189	252	380	6182	7304	8220

DIMENSIONS						
Model	**Overall Length (mm)**	**Diameter of Base (mm)**	**Diameter Top of Horn (mm)**	**Inlet Size (inch)**	**Bolt Circle Diameter (mm)**	**Net Weight (kgs.)**
A-1000	426	186	153	1/2	167	2,5
A-1200	775	186	178	1/2	167	4
A-2900	1124	286	318	1	267	10
A-4100	1170	365	362	1	346	17
A-6200	1220	432	400	1	394	20

AB-JF Jet Fans

The Airblast Jet Fan is a four-bladed vaneaxial fan which operates through a high velocity jet of compressed air which is ejected from the trailing edge of the blade. This results in the forward rotation of the fan wheel just like a jet plane is pushed forward by the high-velocity jet ejected from the rear of the jet engine.

Features:

- Use for general ventilation in any location where compressed air is available.
- Suiteable for ventilation of tanks, process vessels, or other confined areas for the removal of hazardous fumes or contaminated air from welding, sandblasting and other operations.
- Rated operating pressure 3-8 bar (40-110 PSI).
- Design allows for lower RPMs while still moving significant air volumes.
- Bearings are repacked with a hi-tech synthetic lubricant for longer life.
- Propeller balanced by removing material from end of blades.
- Use as blower or exhauster.
- Electro polished stainless steel fan guard.
- Heat treated to T6 aircraft aluminum specifications.
- Super-duty, high quality, high pressure air seal for longer service.
- Six guide vanes to smooth air flow eliminating turbulence.

Construction:

- Fan blade and housing: Spark resistant 356 aluminum heat treated to T6 aircraft aluminum specification.
- Fan Guards: Stainless steel; meets OSHA requirements.
- Shaft: Stainless steel.
- Locking mechanisms: Stainless steel lock shield, bear hug retainer.
- Bearings: Premium ball bearings sealed with a high-performance synthetic grease.
- Flanges: Matches 20” & 24” American Petroleum Institute tank opening.
- Convertible design: Use for supply or turn it around and use as an exhauster; flange mountings are identical on both sides.

ORDERING INFORMATION

Part no.	Description
8850090	AB-JF 20 Jet Fan
8850007	AB-JF 24 Jet Fan

OPTIONAL

Description
20” API Flange Plate (508 mm)
24” API Flange Plate (609.66 mm)

Performance CFM against static pressure

Compres. air (PSIG)	Average RPM	Air Usage CFM	CAPACITY (CFM) AGAINST STATIC PRESSURE (IN. WC)									
			0	1	2	3	4	5	6	7	8	9
AB-JF20												
40	2,080	60	5,920	3,580	1,650	220	0					
60	2,695	114	7,600	5,870	3,860	2,350	1,200	200	0			
80	3,225	186	9,100	7,730	6,000	4,410	3,180	2,140	1,190	270	0	
100	3,670	292	10,420	9,200	7,850	6,260	4,770	3,650	2,680	1,850	1,070	350
AB-JF24												
40	1,565	76	8,104	2,391	0							
60	2,053	147	11,005	7,312	2,649	0						
80	2,570	225	12,848	9,969	6,223	3,397	1,225	0				
100	3,138	338	16,136	13,975	11,295	8,350	6,326	4,638	2,950	1,261	0	

Compressed Air Aftercoolers

Compressed-air conditioning is indispensable for ensuring fault-free performance of blasting and paintspraying equipment as well as for compressed air tools. Conditioned compressed air contributes to improving the quality of blasted surfaces since most of the oil and water have been removed from the compressed air. Conditioned air improves productivity, reduces maintenance and lowers operating costs.

Air-Cooled Compressed Air After-Coolers
Airblast air-cooled after coolers uitlize free and readily available atmospheric air as the cooling medium. The hot and with moisture laden compressed air is effectively treated to reduce and eliminate the moisture load on downstream equipment. The units are available as electrically or pneumatically operated models and are supplied complete with a moisture separator and oiler for pneumatic motors and are fitted in a heavy duty transport frame.

Compressed Air Filters
Airblast filters protect compressed air dryers, equipment, instrumentation and processes by removing compressor oils, dirt, rust and other types of contaminants. We supply air filters of various types; ceramic filters capable of filtering up to 3 microns and fibre membrame filters for filtering up to 0.01 microns. All filter elements are designed and built to provide maximum reliability and service life at the lowest possible pressure drop.

Capacities are based upon the following conditions:

Ambient temperature : 21°C - 35°C
Working pressure : 7 bar (max. 12 bar)
Rel. humidity : 60%
Air inlet temperature : 120°C
Delta T : 9°C (above ambient temperature)

ORDERING INFORMATION

Art. nr.	Model	Nominal capacity (m^3/min.)	Air consumption (lpm)
5082000	ABAC-30 PN	3	250
5082500	ABAC-40 PN	4	300
5083500	ABAC-65 PN	6	450
5084000	ABAC-80 PN	8	500
5084500	ABAC-120 PN	12	600
5085000	ABAC-160 PN	16	750
5085500	ABAC-200 PN	20	750
5086000	ABAC-250 PN	25	950

DC-6, DC12 & DC-20 Mobile Dust Collectors

Compact, transportable, flexible and well designed - These are the main features of the Airblast mobile dust collection systems, either standard or designed specifically for the job on hand. A complete range of easy-to-transport filter units, cartridge or bag type for use on shipyards, bridges or for many other blast cleaning operations. Most popular sizes are suitable for 6.000, 12.000 and 20.000 cubic meters per hour.

Operating principle
Dust laden air enters through the inlet plenum of the collector, where heavy particles fall immediately into the hopper. As the air flows through the filter cartridges, dust is deposited on the outside of the filtering media. The filter cartridges are cleaned automatically and continually without interrupting the operation of the dust collector. An adjustable timer controls the cycle-time.

Solenoid valves introduce jets of high-pressure air into each pair of cartridges in turn, through the venturi opening above each cartridge.

The resulting reverse airflow cleans the filter cartridges. Dust removed from the filter surface settles into the hopper. As each pair of filter cartridges is cleaned in succession, the remaining stay in operation. Extremely high dust loading is handledeasily.

Further complete with electrical panel with automatic switch controllers, main switch, signalling lamps and control buttons for 1 ventilator and control unit for cartridge cleaning valves.

MOBILE DUST COLLECTORS			
	DC-6	**DC-12**	**DC-20**
Exhaust capacity (m³/hr)	6.000	12.000	20.000
Static pressure (Pa)	2000	2000	3000
Electric motor (kW) (Volt) (Phase) (Hz)	 5,5 400 3 50	 12 400 3 50	 30 400 3 50
Filter cartridges (pcs.)	6	12	20
Filter area (m²)	93,6	187,2	312
Filter material	polyester fabric Type NA - 806	polyester fabric Type PE - 806	polyester fabric Type NA - 806
Filter percentage (%)	99,9	99,9	99,9
Max. dust emission (mg/nm³)	< 3	< 3	< 3
Collecting bags (pcs.)	2	4	4
Connection (Ø mm)	1 x 300	2 x 300 w/regulating valve	3 x 300 w/regulating valve
Cleaning air pressure	continuous by compressed air max. 5 bar		
Nr. of solenoid valves	6 (1" G)	4 (1½" G)	8 (1½" G)
Pulsation pressure (bar)	± 4	± 5	± 5
Cycle time	adjustable		
Sequence	1 cartridge simultaneous	3 cartridges simultaneous	2 or 3 cartridges simultaneous
Inspection hatch	1 pc.	2 pcs.	1 pc.
Weight (kgs)	± 900	± 1260	± 2300
Dimensions Total lenght (mm) Width (mm) Height (mm)	 2300 1150 2150	 3350 2050 2350	 4500 2000 2400

DC-12/ATEX Mobile Dust Collector

Mobile "explosion proof" cartridge dust-filter unit suitable for dust extraction during metallization with 85/15 zink/aluminium wire or 100% zink made of steel sheet 3 mm reinforced with steelprofiles.

Consisting of:

- Complete ATEX Explosion proof cartridge dust-filter suitable for dust-extraction during metallization with 85/15 zink/ aluminium wire and blasting. Max. KST 250 bar•m/s.
- Explosion panel positioned on top of the filter unit.
- Directly driven ventilator suitable for zone 21.
- Ventilator is provided with an encasing for noise reduction, Noise level approx. 72 dbA.
- Ducting including back pressure valve and special pre-separator.
- Air exhaust is including silencer.
- The complete installation is grounded, ground terminal will be provided by the customer; connection close to the filterunit.

MOBILE DUST COLLECTORS	
DC-12 ATEX	
Exhaust capacity (m³/hr)	6.000
Max. KST-value (bar•m/s)	250
Total pressure (Pa)	3200
Electric motor (kW) (Volt (Hz)	 7,5 400/690 50
Fan	EX II 3D T 80 ºC - directly driven
Filter cartridges (pcs.)	12
Filter area (m²)	187,2
Filter material	anti static
Filter category	BIA category M
Filter percentage (%)	99,9
Max. dust emission (mg/nm³)	< 0,2
Cleaning	automatic pressure air; max. 6 bar
Hose connection (Ø mm)	300
Cleaning pressure (bar)	± 5
Sequence	adjustable
Filter percentage (%)	99,9
Pneumatic connection	½"
Dust collecting (drum in ltr.)	50
Weight (kgs)	± 1150
Dimensions Total lenght (mm) Width (mm) Height (mm)	 4410 1580 2440

Air-Cooled Dehumidifiers - Far East version

The Airblast Air-Cooled Dehumidifiers are used for drying air of up to 100% relative humidity (RH) with temperatures from -30 ºC to +40 ºC.

The applications are numerous and wide spread. Below are some examples:

- Surface treatment during internal blasting and painting of tanks
- Shipping industry, both for permanent and temporary applications
- Controlling humidity levels in production processes
- Protection of equipment sensitive to corrosion
- Climatic improvements in damp areas

Airblast Dehumidifiers are delivered as a complete unit with fans, filters, rotor and controls. The dehumidifier is ready for site installation and connection to standard-size ducting.

Each dehumidifier will be custom designed according to the local conditions and the needs of the customer.

AIR-COOLED DEHUMIDIFIERS - FAR EAST VERSION

	DH6000S	DH9000S	DH12000S	DH18000S
Process airflow (m³/hr)	6000	9000	12000	18000
Compressor power (HP/kW)	40/30	50/37	60/45	110/82
Compressor capacity (kW/hr)	150.5	191.4	207	379.6
Process blower (kW)	5.5	11	15	30
Reheating capacity (kW)	27	27	27	54
Condenser fans (kW)	2*2.2	3*2.2	3*2.2	6*2.2
Static pressure (Pa/H2O)	2000	2500	3000	4000
Power consumption (kW)	66.9	81.6	93.6	179.2
Condenser	Copper tube / Aluminium fins			
Evaporator	Copper tube / Copper fins			
External dimension LxWxH (mm)	2800x2200x2220	3800x2300x2420	3800x2300x2520	5920x2300x2500
Weight (metric ton)	2.8	3.5	4	7
Discharge dimension (mm)	2 - Ø 280	3 - Ø 280	4 - Ø 280	6 - Ø 280

Note (All Models):

1. Power supply: 3-phase plus earth 415V / 50 Hz
2. Refrigerant: R22
3. Cooling step control: 25%~50%~75%~100%
4. Cooling Media: Air
5. Discharge condition: 25 ± 3 °C/RH below 45%
6. We have the policy to improve our equipment continuously & shall reserve the rights to change the dimensions and specs without prior notice.

DIMENSIONS				
	DH6000S	**DH9000S**	**DH12000S**	**DH18000S**
A (mm	2800	3800	3800	5920
B (mm)	2200	2300	2300	2300
C (mm)	2220	2420	2520	2500
D (mm)	1300	1300	1300	1300

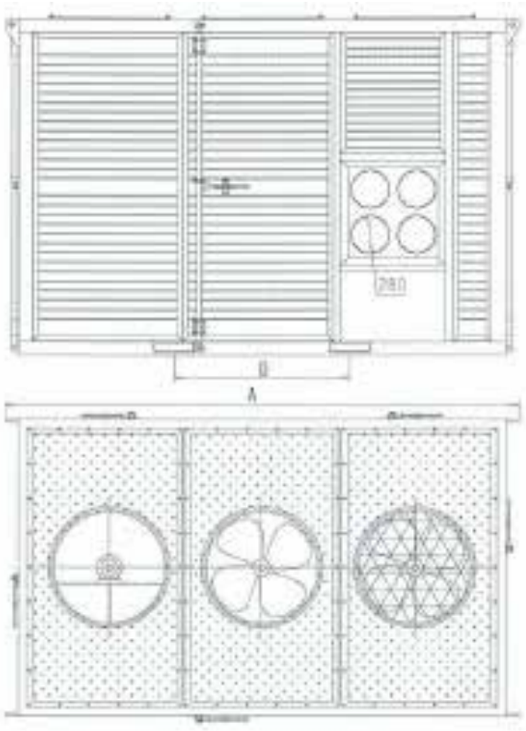

Air-Cooled Dehumidifiers - Middle East version

The Airblast Air-Cooled Dehumidifiers are used for drying air of up to 100% relative humidity (RH) with temperatures from +45 ºC and above.

The applications are numerous and wide spread. Below are some examples:

- Surface treatment during internal blasting and painting of tanks
- Shipping industry, both for permanent and temporary applications
- Controlling humidity levels in production processes
- Protection of equipment sensitive to corrosion
- Climatic improvements in damp areas

Airblast Dehumidifiers are delivered as a complete unit with fans, filters, rotor and controls. The dehumidifier is ready for site installation and connection to standard-size ducting.

Each dehumidifier will be custom designed according to the local conditions and the needs of the customer.

AIR-COOLED DEHUMIDIFIERS - MIDDLE EAST VERSION

	DH6000S	DH9000S	DH12000S	DH18000S
Process airflow (m³/hr)	6000	9000	12000	18000
Compressor power (HP/kW)	60/45	80/60	100/75	140/105
Compressor capacity (kW/hr)	207	277	340	490
Process blower (kW)	5.5	11	15	30
Reheating capacity (kW)	27	54	54	72
Condenser fans (kW)	3*2.2	4*2.2	6*2.2	8*2.2
Static pressure (Pa/H2O)	2000	2500	3000	4000
Power consumption (kW)	85	134	157	225
Condenser	Copper tube / Aluminium fins / Stainless structure			
Evaporator	Copper tube / Copper fins / Stainless structure			
External dimension LxWxH (mm)	3800x2300x2500	4900x2300x2500	5900x2300x2520	6500x2300x2500
Weight (metric ton)	3.8	5.5	7	8
Discharge dimension (mm)	2 - Ø 300	3 - Ø 300	4 - Ø 300	6 - Ø 300

Note (All Models):

1. Power supply: 3-phase plus earth 415V / 50 Hz
2. Refrigerant: R22
3. Cooling step control: 25%~50%~75%~100%
4. Cooling Media: Air
5. Discharge condition: 25 ± 3 °C/RH below 45%
6. We have the policy to improve our equipment continuously & shall reserve the rights to change the dimensions and specs without prior notice.

DIMENSIONS				
	DH6000M	**DH9000M**	**DH12000M**	**DH18000M**
A (mm	3800	4800	5900	6500
B (mm)	2300	2300	2300	2300
C (mm)	2500	2500	2520	2500
D (mm)	1300	1300	1300	1300

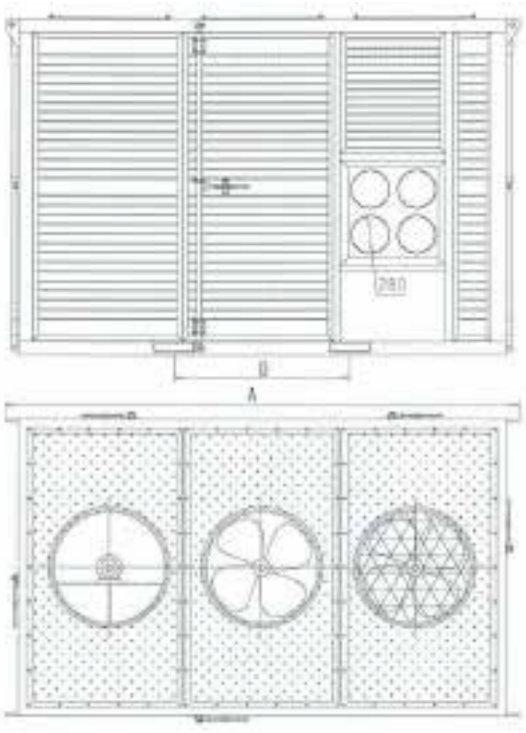

Section 10 - Inspection

Product	Page
DTH-100 Digital thermometer	198
MTH-110/111 Magnetic thermometer	199
DPM-120 Dewpoint meter	200
WHM-130 Whirling hygrometer	202
DPC-140 Dewpoint calculator	203
SSM-200 Soluble salt meter	204
BTK-220 Bresle test kit	206
BTP-230 Bresle patches	208
RGB-260 Rust grade book	209
TXT-300/TXG-320 Testex surface roughness kit	210
SRC-340/341 Surface roughness comparator	211
SPG-360 Surface profile gauge	212
DFT-400/420 Dry film thickness gauge	213
DFT-440 Dry film thickness gauge	215
DFT-441 Dry film thickness gauge	216
Probes for DFT-440/441	218
WFT-450/455 Wet film thickness comb	218
HAT-500 Hydraulic adhesion tester	219
CHC-520 Cross hatch cutter	221
HOD-600 DC holiday tester	222
PHD-620 Pin hole detector	224

DTH-100 Digital Thermometer

The DTH-100 Digital Thermometer allows immediate measurement of the substrate temperature.

The digital display clearly indicates the prevailing temperature and auto-updates as the temperature changes.

The ergonomic housing ensures a comfortable fit into the palm of the hand or easy storage in a pocket. The unit is supplied in a protective pouch for safe and easy storage.

The rigid stainless steel ribbon surface contact probe is secured into the body of the housing when not in use protecting against accidental damage. By folding the probe out of the housing through 180 degrees the unit turns on and becomes ready for use. The battery saving auto-shut-off feature turns off the product after five minutes of inactivity.

Accurate temperature information is important to ensure, for example, that the substrate remains within the advised temperature parameters of the coating system, or to ensure that the substrate temperature remains above the prevailing dew point.

A calibration certificate traceable to UKAS is available as a cost option upon request.

ORDERING INFORMATION

Part no.	Product	Range	Range temperature	Accuracy	Cal Cert Part No.
7861000	DTH-100 Digital Thermometer - Metric	-50 to 300°C	1°C	±1%	7861005
7861001	DTH-100 Digital Thermometer - Imperial	-50 to 572°F	1°C	±1%	7861005

MTH-110/111 Magnetic Thermometer

The MTH-110 Magnetic Thermometer allow immediate measurement of the substrate temperature.

The MTH-110 Magnetic Thermometer measures surface temperature. The thermometer can easily be placed on ferrous substrates with the strong magnet on the back. Surface temperature can be read out in both °C and °F. Measuring Range is -10°C to + 70°C; +14°F to +160 °F. The diameter of the thermometer is 63 mm. Can be used in vacuum. No plastic parts on the outside of the thermometer.

The MTH-110 Magnetic Thermometer for surface temperature comes in a genuine leather pouch with belt-clip.

ORDERING INFORMATION

Part no.	Product	Range
7861100	MTM-110 Magnetic Thermometer	-10° to +70°C +14°F to 160 °F

10

DPM-120 Dewpoint Meter

AIRBLAST

The DPM-120 is a multi-functional instrument which can be used to measure, record, and analise the important climatic parameters in the surface treatment of metal substrates: air temperature, surface temperature, relative humidity, dew point. Additional information such as the time and date of readings taken are recorded for future reference. The ergonomic and tough DMP-120 is supplied in a convenient protective carry case.

Accurate temperature and humidity information is important to ensure, for example, that the substrate remains within the advised temperature parameters of the coating system, or to ensure that the substrate temperature remains above the prevailing dew point.

Features

- ◇ Large illuminated graphic display
- ◇ One-hand operation
- ◇ Simple menu-driven user interfaceExtensive data-logging capabilities, readings are time and date stamped and stored on the gauge
- ◇ USB-Interface connects the unit to the PC for programming and downloading data.
- ◇ To be used as "on the spot" inspectors tool or "stand-alone" data logger
- ◇ Heavy duty ergonomic case
- ◇ Set limits for each parameter
- ◇ Acoustic and visual alarms
- ◇ Select Celsius / Fahrenheit
- ◇ Automatic trend indicator shows the trend of climatic conditions (rising, falling, stable)
- ◇ High-end industrial sensors and built- in probes
- ◇ Integrated 'back-up' LED flashlight
- ◇ DewLog temperature and humidity monitoring software included
- ◇ Two year valid calibration certificate

Complies with Internationa Standards:
ISO 8502-4, ASTM D3276-05, BS 7079-B4, NACE RP prop 97.

SPECIFICATIONS DPM-120 DEWPOINT METER - PART NO. 7861200		
Humidity		
•	Accuracy	(0…80 °C, 0…176 °F) ± 3 % RH
•	Measurement resolution	0.1 %
•	Measurement range	0…100 % RH
Temperature Ta (air)		
•	Accuracy	± 0.5 °C, ± 1 °F (over the full measurement range)
•	Measurement resolution	0.1 °C, 0.1 °F
•	Measurement range	- 20…+ 80 °C, - 4…+ 176 °F
Temperature Ts (Surface)		
•	Accuracy	± 0.5 °C, ± 1°F (over the full measurement range)
•	Measurement resolution	0.1 °C, 0.1 °F
•	Measurement range	- 30…+ 60 °C, - 22…+ 140 °F
Temperature Ts (Surface External)		
•	Accuracy	± 0.5 °C, ± 1 °F (over the full measurement range)
•	Measurement resolution	0.1 °C, 0.1 °F
•	Measurement range	- 30…+ 60 °C, - 22...+ 140 °F
Display		**Graphical presentation with backlight**
•	Operating temperature range	- 20 °C…60 °C, - 4...+ 140 °
Keys		
•	Menu	3
•	On / off	1 (electronic)
•	LED flashlight	1 (electronic)

Memory		
•	Type	Dynamic
•	Memory size manual logging	6000 records
•	Record content manual logging	time/date, humidity,Ta, Ts, Td,Tdelta, status byte for alarm.
•	Memory size interval logging	12000 records
•	Record content interval logging	R Humidity, Ta and Ts. Other parameters and date and time are calculated.
•	Batches	8 Batches max.
Measurement / Features		
•	Limits	Adjustable for each parameter
•	Lo-Hi Alarms	Beep sound , symbol in display and RED Led.
•	Hold/freeze function	Yes
•	Data storage	Two modes: Manual and interval(auto)
•	Data recall	Gauge displays average, min/max of each batch. Downloading to PC possible via optional adapter.
•	Battery indicator	Yes, detailed.
•	Trend indicator	Yes
•	User interface	Menudriven through up/down/enter key.
•	Languages	4 languages, English, German, French, Spanish
•	Extra	Built-in bright white LED orientation flashlight.

WHM-130 Whirling Hygrometer

The WHM-130 can be used to calculate the prevailing dew point temperature quickly, easily, and economically in combination with a dew point calculation table.

Accurate dew point temperature information is important to ensure that the substrate temperature remains above the prevailing dew point thus avoiding condensation on the substrate.

Rapid rotation of the WHM-130 results in air movement around the thermometer bulbs, one of which measures the ambient temperature, the other measures the wet bulb (being housed in a reservoir in a fabric sleeve). The resulting temperature readings can be used with the dew point calculation table or dew point calculator to show the dew point. The WHM-130 is supplied in a hard plastic protective case.

A calibration certificate traceable to UKAS is available as a cost option upon request.

Complies with International Standards:
BS 2842, ASTM E 337 B.

ORDERING INFORMATION

Part no.	Product	Range	Resolution	Accuracy	Cal Cert Part No.
7861300	WHM-130 Whirling Hygrometer	-5 to 50°C	0,5°C	±2%	7861320

DPC-140 Dewpoint Calculator

The DPC-140 Dew Point Calculator can be used in conjunction with the WHM-130 Whirling Hydrometer (or an electronic temperature and relative humidity meter) to calculate the prevailing dew point temperature quickly, easily, and economically.

Accurate dew point temperature information is important to ensure that the substrate temperature remains above the prevailing dew point thus avoiding condensation on the substrate.

The DPC-140 is easy to use to establish the dew point: once the temperature readings have been recorded from the WHM-130 Whirling Hydrometer. Determine the dew point by putting the dry bulb temperature (upper white scale 1) against the wet bulb temperature (upper black scale).Read the dewpoint in window 2 against the earlier determined wet bulb temperature.

The DPC-140 is supplied in a protective case.

ORDERING INFORMATION

Part no.	Product	Range	Accuracy
7861400	DPC-140 Dewpoint Calculator	-10 to 50°C	±1%

SSM-200 Soluble Salt Meter

AIRBLAST

A new inspection tool has been developed to replace the Bresle patch method for soluble salt determination. This Soluble Salt Meter, for which United States Patent No. 8,252,600 was issued on August 28 2012, was designed around the current Bresle patch salt inspection method. The SSM test protocol exactly duplicates the Bresle process, except that measurements are automated and there are no consumables (except distilled water). The complete test sequence requires only one minute. The SSM is approved as an authorized alternative to the Bresle patch method.

Benefits

- ◇ Accurate, easy measurements
- ◇ Memory stores up to 1000 measurements for download and analysis
- ◇ Repeatable results
- ◇ Rugged, industrial hardened measurement device
- ◇ Simple operating instructions
- ◇ Reduced process steps (17 steps reduced to 6 steps)
- ◇ Reduced process time (only one minute reading to reading)
- ◇ Eliminate process induced surface contamination (sticky residue)
- ◇ Equipment easily transportable (tank inspections)
- ◇ Improved safety (syringes/needles eliminated)
    - Operator error minimized
    - Metered water injection
    - Automatic data recording feature (configured to work with coating technical file)

SPECIFICATIONS

Standards	Equivalent to ISO Standard 8502-9 (Field method for the conductometric determination of water-soluble salts; The Bresle method) inaccordance with NACE SP0508-2008.
Measurement area	1250 mm (circular) fixed foot print
Attachment method	Magnetic with silicone seal (no effect on surface quality; proven to seal over deep pits)
Water injection method	Automated, with simple press of fixed volume dispenser
Dose	3 ± 0.05 ml
Measurement process steps	5
Total process time	60 seconds (Measurement to Measurement)
Measurement range	0-100 µS/cm
Resolution	1 µS/cm
Measurement accuracy	± 3 µS/cm
Surface temperature range	5-50°C(41-122°F)
Temperature probe accuracy	±0,3°C (± 0,54°F)
Diameter of curvature:	- Standard measuring head >=44 inch/1100mm - Measuring head 1 26<=>42inch/650<=>1050mm - Measuring head 2 14<=>24inch/350<=>600mm - Measuring head 3 8<=>12inch/200<=>300mm
Readout	µS/cm or mg/m2
Memory	Holds up to 1000 measurements (10 batches of upto 100 measurements each)
Connectivity	via USB with PC or laptop
Power supply	Lithium-ion rechargeable battery
IPRating	IP54
Dimensions (instrument only)	21x10x8cm
Weight (instrument only)	780gr.

ORDERING INFORMATION

The SSM can be purchased in two versions: the "Lite" version which includes 50 measurements with the possibility to purchase additional measurements as and when required, and the "Unlimited" version which can take unlimited readings. The "Lite" version provides the possibility to reduce the initial purchase price of the SSM and to purchase additional readings for specific projects. The "Lite" version can be upgraded to the "Unlimited" version by purchasing a licence.

Part no.	Description
7862000	SSM-200 Soluble Salt Meter Kit ("Unlimited" version), includes: ◇ Soluble Salt Meter ◇ SSM adapter flat surface ◇ Dispenser ◇ Power supply ◇ USB cable and PC Software ◇ Calibration fluid ◇ Carrying case ◇ Certificate of performance ◇ Unlimited credit measurements
7862001	SSM-200 Soluble Salt Meter Kit ("Lite" version). Same as above only with 50 measurements.
7862004	Upgrade license from "Lite" version to "Unlimited" version
7862005	100 measurements
7862011	Adapter pipe diameter 65-105cm (26"-42")
7862012	Adapter pipe diameter 35-60cm (14"-24")
7862013	Adapter pipe diameter 20-30cm (8"-12")
7862014	Set of adapters pipe diameter 20-105cm (8"-42")
7862015	Performance check for SSM-200 with certificate

BTK-220 Bresle Test Kit

The presence of salts on the substrate can lead to the premature failure of the coating system. Most high performance coating systems require that the substrate be cleaned to a recognized standard before the application of the coating.

Once the bresle patch is applied to the surface to be tested distilled water can be analysed using the conductivity meter before being injected into and then extracted from the bresle patch the required amount of times before being analysed again in the conductivity meter. The difference in the two readings show the conductivity of the water, by multiplying the result by 0.4 the presence of salts expressed in parts per million is shown.

The BTK-220 Bresle Test Kit includes all the necessary equipment for assessing the level of soluble salts on blast-cleaned surfaces prior to coating. Inside the Bresle Test Kit is a conductivity gauge used for the assessment of soluble salt ions as chlorides, sulphates and nitrates. The Bresle Test Kit complies with the ISO 8502-6 and ISO 8502-9 standards, describing the Bresle Method, that state that the conductivity is mainly directly proportional to the concentration of dissolved salts in the solution.

Contamination of blast-media
The Bresle Kit is also suitable to determine the contamination of blast-media. This prevents the dissolved salts in the recycled abrasive contaminating the surface being cleaned.

Features
Unique Direct Sampling Procedure (DSP) to ensure high speed and accuracy. Up to 60 times more accurate than other test kits available.

Application areas
Marine coatings, protective coatings, pipeline coatings.

Standards:
According to ISO8502-6, ISO8502-9.

SPECIFICATIONS	
Conductivity Meter Range	0,1 – 20.000 mg/m^2 (with DSP method)
Conductivity Meter Resolution	0,1 mg/m^2 (with DSP method)
Conductivity Meter Accuracy	1%
Patches supplied	25
Temperature range	0 – 50 °C
ATC	0 – 50 °C
Normalization temperature	25 °C
Auto off	8.5 minutes after last key pressed
IP class	IP67
Auto calibration	at 84 µS/cm
Patch area	12,50 cm^2
Patch type	Latex membrane

BTK-220 Bresle Test Kit

ORDERING INFORMATION	
Part no.	**Description**
7862200	BTK-220 Bresle Test Kit, complete (includes spares as shown below)
	Spares
7862210	Bresle patches (pack of 25)
7862220	Digital Conductivity Meter (waterproof)
7862221	Cleansing solution 50ml
7862222	Calibration solution 84 µS, 50ml
7862223	Cup 25ml
7862230	Syringe incl. needle 2,5ml
7862231	Syringe without needle 20ml
7862232	Needle
7862240	Deionised water 200ml
	Optional
7862211	Calibration Certificate for BTK-220
7862212	ISO 17025 approved certificate of patches
7862213	Bresle area mask magnet
	On request
	Beaker for testing of blast media 100ml

Standard delivery includes
- ◇ Digital conductivity meter
- ◇ Bresle patches 25 pcs.
- ◇ Cleansing solution 50ml / Calibration solution 84 µS 50ml / Deionised water 200ml
- ◇ Cups, Syringes and needle
- ◇ Instruction manual

Special care
- ◇ Always clean the instrument after use and keep the instrument in its case when not in use.
- ◇ Depending on the frequency of use, a thin film may occur on the probe. Use a clean cotton swap and cleansing solution to remove this.

BTP-230 Bresle Patches

The Bresle patch is a self-adhesive film patch for taking samples of soluble impurities on a test surface.

Application
Surface contaminants, such as salt, may cause coating failure and increase maintenance costs for vessels, industry buildings and steel structures in general. Coating failure such as blistering and corrosion may be the result of a too high level of salt prior to painting. The Bresle method described in the ISO 8502-6 is commonly used to measure the level of surface salts prior to coating. A so-called Bresle patch (a small self-adhesive plastic patch) with a washed latex membrane and a known surface area is used to dissolve the soluble salts. can be used to check for the presence of salts such as chlorides and sulphates on the substrate prior to the application of the coating.

ORDERING INFORMATION		
Part no.	7862210	
Description	Bresle patches (packed in a plastic container per 25 pcs.)	
Technical Specifications	Size Sample volume Test Area Stresstest	: 5 x 5 cm (2.0”x 2.0”) : 2.5 ml. : 12.5 cm² (1.93 sq. inches) : Meets ISO8502-6 Annex A.
Material	Elastic film Tape Protective paper	: Latex : PE with acrylic based adhesive : Coated
	One Bresle patch contributes with less than 8 mg NaCI/m² (0,8µg Na/CI/cm²)>.	
Certification	Each production batch of Airblast Bresle patches is certified by an ISO 17025 accredited test laboratory.	
Storage	Store in a cool and dark place. Keep Bresle patch away from direct sunlight.	

RGB-260 Rust Grade Book

The ISO 8501-1 Rust Grade Book contains reference photographs representative of different rust grades and preparation grades that are used to specify the quality of surface preparation.

The Rust Grade Book identifies four levels (designated as rust grades) of mill scale and rust that are commonly found on surfaces of uncoated erected steel and steel held in stock. It also identifies certain degrees of visual cleanliness (designated as preparation grades) after surface preparation of uncoated steel surfaces and of steel surfaces after overall removal of any previous coating. These levels of visual cleanliness are related to the common methods of surface cleaning that are used prior to painting.

Intended to be a tool for the visual assessment of rust grades and of preparation grades, it includes 28 representative photographic examples.

The book also contains high quality colour pictures of the blast-cleaning surface grades of Sa1, Sa2, Sa2.5 and Sa3, together with detailed descriptions and incorporates pictures from the Swedish Standard SIS SS 05 59 00.

Prepared by ISO (International Organization for Standardization).

Complies with Internationa Standards:
ISO 8501-1, SIS SS 05 59 00.

ORDERING INFORMATION

Part no.	Description
7862600	Rust Grade Book ISO 8501-1

TXT-300/TXG-320 Testex Surface Roughness Kit

TXG-300 Testex Tape accurately reproduces the profile of the blasted surface which can be read by the TXG-320 Testex Gauge.

Achieving the correct profile during the blasting process is critical to ensure that the coating system to be applied performs correctly.

The TXG-300 Testex Tape is fitted with a protective paper which needs to be removed before the tape is adhered to the blasted surface and pressure applied. When removed the tape features the profile of the blasted surface which can be read by the gauge and the average maximum peak to valley height calculated. The gauge first needs to be zeroed to 50 microns to take into account the backing on the tape, then the tape is placed in the gauge and the movable anvil adjusted onto the film – the reading is then ready to be taken.

Locations which are not easily accessible to other devices such as inside pipes and grooves can easily be measured using the testex tape method.

A calibration certificate traceable to UKAS is available as a cost option upon request.

Complies with International Standards:
ISO DIS 8503-3, BS 7079-C5, ASTM D 4417-C, NACE RP 0287-95.

ORDERING INFORMATION

Part no.	Description	Range Metric	Range Imperial	Nr. of tests	Conformance Certificate
7863301	TXG-300 Testex Tape - Coarse	20-50 µm	0.8-2.0 mils	50	7863011
7863302	TXG-300 Testex Tape - X-Coarse	40-115 µm	1.5-4.5 mils	50	7863011
7863303	TXG-300 Testex Tape - X-Coarse Plus	100-125 µm	4.0-5.0 mils	50	7863011
Part no.	**Description**				
7863304	Burnishing tool - plastic				
Part no.	**Description**				**Calibration Certificate**
7863200	TXG-320 Testex Gauge (Metric and Imperial)				7863205

SRC-340/341 Surface Roughness Comparator

A precision Nickel Comparator Plate that conforms to International Standard ISO 8503 and ASTM D4417 for grit and shot blasted surface roughness comparison.

The SRC-340 (Grit) and SRC-341 (Shot) Surface Roughness Comparators can be used to assess the roughness of the surface of a substrate which has been blasted with shot or grit.

The classification of blast cleaned surfaces is subjective. In order to assist regular and consistent classification shot blasted surfaces can be defined as angular (after blasting with grit), or dimpled (after blasting with shot), and furthermore into three grades: Fine, Medium, Course (as per ISO 8503).

The grades are defined as follows:

Fine : profile equal to segment one and up to but excluding segment two.
Medium : profile equal to segment two and up to but excluding segment three.
Course : profile equal to segment three and up to but excluding segment four.

The relevant Comparator can be placed against the blasted surface and each of the four sections compared with the surface finish assisted with the use of an illuminated magnifier.

The Comparator is supplied in a protective case.

Complies with International Standards:
ISO, 8503-1, ISO 8503-2, ASTM D 4417-AABS 772.

ORDERING INFORMATION

Part no.	Model type	Section profiles Metric	Section profiles Imperial
7863400	Grit	25µm, 60µm, 100µm, 150µm	1mils, 2.4mils, 4mils, 6mils
7863410	Shot	25µm, 40µm, 70µm, 100µm	1mils, 1.6mils, 2.8mils, 4mils
7865580	Illuminated Magnifier 2.5x (for viewing the Surface Comparator)		

SPG-360 Surface Profile Gauge

The SPG-360 Surface Profile Gauge can be quickly and easily used to establish the valley – to - peak height of a blast cleaned surface in compliance with the ASTM D4417 standard.

Achieving the correct profile during the blasting process is critical to ensure that the coating system to be applied performs correctly.

The SPG-360 Surface Profile Gauge is easy to use: simply place the gauge on a glass plate and zero the instrument, then place the gauge onto blasted surface, the sharp stylus point rests on the bottom of the valley and the flat foot sits atop the peak – the gauge digitally displays the height difference between the two values.

The SPG-360 Surface Profile Gauge has a resolution of one micron and can be switched between imperial and metric readings, is supplied complete with a glass zero plate in a protective carry case.

A calibration certificate traceable to UKAS is available as a cost option upon request.

Complies with International Standards:
ASTM D 4417-B, SABS 772.

ORDERING INFORMATION					
Part no.	**Description**	**Range**	**Resolution**	**Accuracy**	**Cal Cert Part No**
7863600	SPG-360 Surface Profile Gauge	0–3,4mm 0–0.12 inch	1µm 0.04mils	± 5µm ± 0.2mils	7863605

DFT-400/420 Dry Film Thickness Gauge

The DFT-400 Dry Film Thickness Gauge provides a fast and economical solution to non-destructive dry film thickness assessment on ferrous substrates only. The DFT-420 Dry Film Thickness Gauge provides a fast and economical solution to non-destructive dry film thickness assessment on **ferrous** and **non-ferrous substrates**.

In order for coating systems to perform as designed the thickness of each coat of paint must be within tolerances set by the material manufacturer – assessing the dry film thickness of the paint after the coating process is an invaluable tool to ensuring that the thickness of the coating is as specified.

The DFT-400 & DFT-420 Dry Film Thickness Gauges are ergonomic and light weight yet tough and reliable, and are powered by standard alkaline batteries. Both units are switched on by placing the probe on the substrate to be measured and feature single button operation and intuitive menus. An audible signal confirms that a reading has been successfully taken and the back lit screen displays readings clearly and quickly. Each gauge is supplied with calibrated for life; this means that there is no requirement to calibrate the gauge before use, or in changing climatic conditions - simply use the zero plate provided to zero the gauge before use, or in changing climatic conditions, to ensure the accuracy of the readings.

Both gauges are available in integral or separate probe design both with an industry leading polished ruby tip ensuring millions of fast, reliable and accurate readings of up to Fe 5000 microns or/and NFe 3000 microns. Each gauge features a sleep mode which turns the unit off after a short period of inactivity, by placing the probe onto a surface to be measured the unit reactivates and is immediately ready for use.

The DFT-400 & DFT-420 are supplied in foam filled hard plastic carry cases with an additional soft plastic pouch for ease of transportation in the job site, reference plates, 2 x 1,5 V Mignon batteries (type AA alkaline), test certificate and instruction manual. Both gauges have hand sizes straps allowing for easy fixing on the wrist or clothes.

DFT-400/420 SPECIFICATIONS	
Measuring Principle	Two magnetic measuring principles: Fe: Magnetic-Flux/Hall Effect ref Fe* NFe: Eddy Current (DFT-420 only)
Standards & Regulation	DIN EN ISO 2808, ISO 2178, ASTM B 499, ASTM D 7091 (only DFT-420: ISO 2360)
Probe Type	integrated or - optional - cable probe with 1 m. cable
Measuring Range	Fe: 0.0 – 5000 µm or 0.0 – 3000 µm. NFe: 0.0 – 3000 µm (DFT-420 only)
Metric System µm / mil	Yes
Measuring Interval	Single measurement: 850 ms
Display Metric	from 0.0 – 999 in µm, from 1000 µm in mm
Resolution	1 µm in the range up to 999 µm, 0.01 mm in the range from 1 mm
Accuracy	± (2µm + 3% of the readings)
Minimum Measuring Area	Ø 25 mm
Minimum Curvature	convex: 5mm, concave: 25mm
Minimum Substrate Thickness	Fe: 0.2 mm. NFe: 0.05 mm (DFT-420 only)
Display	Graphic-LCD
Temperature Range	0 – 50° C
Permitted Storage Temperature	-10° C – 60° C
Power Supply	2 x Mignon Batteries: 1.5 V (type AA alkaline)
Dimensions (L x W x H in mm)	100 x 60 x 27 (gauge with integrated probe)
Weight incl. battery	Gauge with integrated probe: 105 g. Gauge with cable probe: 147 g

Fe* Measuring of non-ferromagnetic coatings on ferromagnetic substrate, for example measuring on steel- or iron-substrates.
NFe* Measuring of non-ferromagnetic and electrically non-conductive coatings (insulating coatings) on non-ferromagnetic and electrically conductive substrate, for example measuring on aluminum-, zinc-, brass- and certain stainless (high-grade) steel-substrates.

Technical data subject to change without notice.

DFT-400/420 Dry Film Thickness Gauge

AIRBLAST

Simply perfect
With the DFT-400/420, precise measurements on steel, iron and non-ferrous metals are simply perfect. Switch between the measuring procedures by simply pressing the button.

The sensitive measuring probe is fully integrated into this extremely small, light and handy gauge – optionally available as Cable Probe. Its readable LCD informs about readings, battery condition, mode of operation and serial number.

Product advantages
- ◇ Gauge for standard applications – easy, safe and fast measurements.
- ◇ One-hand operation. Only one button.
- ◇ No calibration required.
- ◇ Automatic On/Off.
- ◇ High precision over the entire measuring range: NFe 0 – 3000 µm and Fe 0 – 5000 µm.
- ◇ Broad spectrum of use for non-destructive measurements on steel, iron and non-ferrous metals such as aluminum, zinc, copper and brass.
- ◇ Proven technology: Hall sensor and Eddy Current technology.
- ◇ Acoustic signal confirms taking of a measurement.
- ◇ Wear-proof ruby probe tip for long-term use.

Optimal LCD-Display
- ◇ Large clear numbers for optimum readability.
- ◇ Precise display of readings, battery condition, mode of operation and serial number.
- ◇ Backlit display.

ORDERING INFORMATION

Part no.	Description
7864000	DFT-400 Dry Film Thickness Gauge FE
7864001	DFT-400 Dry Film Thickness Gauge FE 3MM (SEPARATE)
7864002	DFT-400 Dry Film Thickness Gauge FE 5 MM (INTEGRAL)
7864003	DFT-400 Dry Film Thickness Gauge FE 5MM (SEPARATE)
7864200	DFT-420 Dry Film Thickness Gauge FE/NFE
7864201	DFT-420 Dry Film Thickness Gauge with probe FE/NFE 3/3mm
7864202	DFT-420 Dry Film Thickness Gauge FE/NFE 5/3mm
7864203	DFT-420 Dry Film Thickness Gauge FE/NFE 5/3mm

Part no.	Description
7864010	Cable for DFT-400/420
7864011	Probe Fe 3mm for DFT-400
7864012	Probe Fe 5mm for DFT-400
7864211	Probe Fe/NFe 3mm for DFT-420
7864212	Probe Fe 5mm / NFe 3mm for DFT-420

DFT-440 Dry Film Thickness Gauge

The DFT-440 Dry Film Thickness Gauge provides a fast and economical solution to non-destructive dry film thickness measurement, data storage, and analysis on ferrous and non-ferrous substrates, is calibrated for life, features a patented probe design which allows for **integral or separate** use, are also available as wireless probes and has an industry leading three year warranty.

In order for coating systems to perform as designed the thickness of each coat of paint must be within tolerances set by the material manufacturer – measuring the dry film thickness of the paint after the coating process is an invaluable tool to ensure that the thickness of the coating is as specified.

The DFT-440 Dry Film Thickness Gauge is ergonomic and light weight (127 gram) yet tough and reliable, and is powered by standard alkaline batteries. The easy to use back lit four button key pad is intuitive and leads the user through the available menu options. The back lit screen displays readings clearly and has the possibility to flip through 180 degrees when the gauge is turned upside down.

In addition to a (constant) factory calibration, the DFT-440 offers two calibration processes that are useful during specific measuring tasks such as measurement on curvatures or small parts.

- A one-point calibration can optimize the probe's measuring accuracy with an expected coating thickness.
- A two point calibration can increases the probe's measuring accuracy in a certain coating thickness range.

Up to one hundred readings can be stored in the gauge and can be downloaded via a wireless connection (software available as option). Once downloaded the data can be analysed and stored in Excel.

The DFT-440 Dry Film Thickness Gauge features a patented probe design which allows for integral or separate use to access hard to reach areas. The probe features an industry leading tip manufactured from ruby ensuring millions of fast, reliable and accurate readings. The gauge features a sleep mode which turns the unit off after a short period of inactivity, by placing the probe onto a surface to be measured the unit reactivates and is immediately ready for use.

A wireless probe is available as a cost option. The wireless probe allows measurements to be taken at a distance of up to twenty meters from one or multiple gauge units allowing for readings to be taken in very hard to access areas as well as being simultaneously monitored and recorded on multiple gauges. The wireless probe is extremely small and light weight (30 grams) and can take up to 4000 measurements without recharging.

The DFT-440 is supplied in a foam filled hard plastic carry case with an additional soft plastic pouch for ease of transportation in the job site. Both the Gauge and the probe have hand sizes straps allowing for easy fixing on the wrist or clothes.

Gauge model	**DFT-440 - part no. 7864400**
Probe type	Integral + Separate
Units	µm/mil
Measurement resolution	0.1 µm in the range below 100 µm, 1 µm in the range from 100 to 999 µm, 0.01 mm in the range from 1000 µm
Operating temperature	0 to 50 °C
Starage temperature	-10 °C to 60 °C

Menu structure		
Measuring Mode	Substrate selection	FE/NFe automated
Measuring Range	Upper/lower limit	
Memory Capacity	up to 100 measurements	
Statistics	Average/standard deviation/ maximum/minimum	

DFT-441 Dry Film Thickness Gauge

The DFT-441 Dry Film Thickness Gauge provides a fast and economical solution to non-destructive dry film thickness measurement, data storage, and analysis on ferrous and non-ferrous substrates, is calibrated for life, features a patented probe design which allows for **integral or separate** use, are also available as wireless probes and has an industry leading three year warranty.

The DFT-441 Dry Film Thickness Gauge is ergonomic and light weight (127 gram) yet tough and reliable, and is powered by standard alkaline batteries. The easy to use back lit four button key pad is intuitive and leads the user through the available menu options. The back lit screen displays readings clearly and has the possibility to flip through 180 degrees when the gauge is turned upside down.

In addition to a (constant) factory calibration, the DFT-440 offers two calibration processes that are useful during specific measuring tasks such as measurement on curvatures or small parts.

- A one-point calibration can optimize the probe's measuring accuracy with an expected coating thickness.
- A two point calibration can increases the probe's measuring accuracy in a certain coating thickness range.

Up to thirty thousand readings can be stored in up to 250 batches in the gauge before downloading via a wireless connection to the software provide as standard with the gauge. Once downloaded the data can be analysed and stored in Excel.

When taking readings on very rough substrates the average zero value can be stored in the gauge memory to ensure that the substrate condition does not affect the quality of the readings. Furthermore a unique "Combined" mode allows the simultaneous measurement of zinc plated and epoxy based coating on steel substrates – in this mode the gauge will display the two separate coatings as two separate values.

The DFT-441 Dry Film Thickness Gauge features a patented probe design which allows for integral or separate use to access hard to reach areas. Each probe features an industry leading tip manufactured from ruby ensuring millions of fast, reliable and accurate readings. The gauge features a sleep mode which turns the unit off after a short period of inactivity, by placing the probe onto a surface to be measured the unit reactivates and is immediately ready for use.

A wireless probe is available as a cost option. The wireless probe allows measurements to be taken at a distance of up to twenty meters from one or multiple gauge units allowing for readings to be taken in very hard to access areas as well as being simultaneously monitored and recorded on multiple gauges. The wireless probe is extremely small and light weight (30 grams) and can take up to 4000 measurements without recharging.

Gauge model	**DFT-441 - part no. 7864410**
Probe type	Integral + Separate
Units	µm/mil
Measurement resolution	0.1 µm in the range below 100 µm, 1 µm in the range from 100 to 999 µm, 0.01 mm in the range from 1000 µm
Operating temperature	0 to 50 °C
Starage temperature	-10 °C to 60 °C

Menu structure	
Measuring Mode	FE/NFe automated, combined measurement
Measuring Range	Upper/lower limit, average
Memory Capacity	up to 30.000 measurements in 250 batches
Statistics	Average/standard deviation/ maximum/minimum

Probes for DFT-440/441

Interchangeable probes/Probe type	Fe 2000 µm pn. 7864420	Fe 5000 µm pn. 7864421	NFe 2000 µm pn. 7864422	Dual Fe/NFe 2000 µm pn. 7864423	Dual Fe/ NFe 5000 /2000 µm pn. 7864424	Dual Fe/ NFe 5000 /5000 µm pn. 7864425
Measuring mode	Magnetic: Magnetic flux/ Hall effect Fe*	Magnetic: Magnetic flux/ Hall effect Fe*	Magnetic: Eddy current NFe*	Magnetic: Magnetic flux/ Hall effect Fe*/ Eddy current NFe*	Magnetic: Magnetic flux/ Hall effect Fe*/ Eddy current NFe*	Magnetic: Magnetic flux/ Hall effect Fe*/ Eddy current NFe*
According to standard	DIN EN ISO 2808 DIN 50981 ISO 2178 BS 5411 (11) BS 3900-C5 ASTM B 499 ASTMD1186 ASTM D 7091	DIN EN ISO 2808 DIN 50981 ISO 2178 BS 5411 (11) BS 3900-C5 ASTM B 499 ASTMD1186 ASTM D 7091	DIN EN ISO 2808 BS 3900-C5 ASTM D 7091 DIN 50984 BS 5411 (3) ISO 2360 ASTM D 1400	DIN EN ISO 2808 DIN 50981, DIN 50984 ISO 2178, BS 5411 (3 & 11) BS 3900-C5, ASTM B 499, ISO 2360 ASTM D 1400, ASTM D 1186 ASTM D 7091	DIN EN ISO 2808 DIN 50981 DIN 50984 ISO 2178 BS 5411 (3 & 11) BS 3900-C5 ASTM B 499 ISO 2360 ASTM D 1400 ASTM D 1186 ASTM D 7091	DIN EN ISO 2808 DIN 50981 DIN 50984 ISO 2178 BS 5411 (3 & 11) BS 3900-C5 ASTM B 499 ISO 2360 ASTM D 1400 ASTM D 1186 ASTM D 7091
Measuring range	0 –2000 µm	0 –5000 µm	0 – 2000 µm	Fe: 0 – 2000 µm NFe: 0 – 2000 µm	Fe: 0 – 5000 µm, NFe: 0 – 2000 µm	Fe: 0 – 5000 µm, NFe: 0 – 5000 µm
Measuring interval	1500 ms	1500 ms	1500 ms	1500 ms	1500 ms	1500 ms
Measuring accuracy regarding automation-standards	± (1 µm + 2% of the reading)	± (1 µm + 2% of the reading) in the range of 0.0 to 2.0 mm± 3.5 % of the reading from 2.0 mm	± (1 µm + 2% of the reading	Fe: 0 – 5000 µm NFe: 0 – 2000 µm	± (1 µm + 2% of the reading) in the range of 0.0 to 2.0 mm ± 3.5 % of the reading from 2.0 mm	± (1 µm + 2% of the reading) in the range of 0.0 to 2.0 mm ± 3.5 % of the reading from 2.0 mm
Minimum measuring surface (mm x mm)	20 x 20					
Minimum radius of curvature	Convex: 5 mm Concave: 30 mm					
Minimum thickness of base material	0.2 mm	0.2 mm	0.05 mm	Fe: 0.2 mm NFe: 0.05 mm	Fe: 0.2 mm NFe: 0.05 mm	Fe: 0.2 mm NFe: 0.05 mm
Operation tempera-ture	0 to 50 °C					
Storage temperature	-10 to 60 °C					
Power supply	From gauge					
Dimensions (L x W x H in mm)	60 x 26 x 22 without extensions					
Weight incl. batteries	ca. 12 g					

Technical data subject to change without notice.

All interchangeable probes also available as wireless probes.

ORDERING INFORMATION WIRELESS PROBES

Part no.	Description
7864426	Wireless probe Fe 2000µm for DFT-440/441
7864427	Wireless probe Fe 5000µm for DFT-440/441
7864428	Wireless probe NFe 2000µm for DFT-440/441
7864429	Wireless dual probe Fe 2000µm / NFe 2000µm for DFT-440/441
7864430	Wireless dual probe Fe 5000µm / NFe 2000µm for DFT-440/441
7864431	Wireless dual probe Fe 5000µm / NFe 5000µm for DFT-440/441

WFT-450/455 Wet Film Thickness Comb

The WFT-450 and WFT-455 Wet Film Thickness Combs can be used to quickly and economically measure the paint thickness whilst the coating is wet.

In order for coating systems to perform as designed the thickness of each coat of paint must be within tolerances set by the material manufacturer – assessing the wet film thickness of the paint during the coating process is an invaluable tool in ensuring that the thickness of the coating is as specified.

In order to achieve an accurate reading the wet film comb is placed onto the substrate while the paint is still wet ensuring that the flat end plates are pressed against the substrate – by assessing which teeth have touched the coating the thickness of the paint can be assessed.

The WFT-450 Wet Film Thickness Comb is a precision machined hexagonal/octagonal precision measuring comb made of heavy stainless steel for high accuracy and is available with a wide range of measurements in both metric an imperial scales. After use solvents can be used to clean the instrument to ensure the accuracy of future readings. The comb is supplied in a protective wallet.

Complies with International Standards:
ISO 2808-7B, BS 3900-C5-7B, ASTM D 4414-A, NF T30-125.

The WFT-455 Wet Film Thickness Comb is manufactured in plastic and is designed for economical one time use. The comb can be kept as a permanent record of the wet film thickness once the paint has been allowed to day on the teeth. The comb measures a wide range of measurements in both metric and imperial scales.

ORDERING INFORMATION

Part no.	Product	Range Metric	Range Imperial	No. of teehth	Range of teeth	Conformance Cert. part no.
7864500	WFT-450 (stainless steel)	25-2000µm	1-78mils	36	25, 50, 75, 100, 125, 150, 175, 200, 225, 250, 275, 300, 350, 400, 450, 500, 550, 600, 650, 700, 750, 800, 850, 900, 950, 1000, 1100, 1200, 1300, 1400, 1500, 1600, 1700, 1800, 1900, 2000µm	7864020
7864550	WFT-455 (1 pc.)	50-900µm	2-36mils	18	2.5, 3, 3.5, 4, 5, 6, 8, 10, 12, 14, 16, 20, 24, 28, 32, 36	n/a
7864551	WFT-455 (pack of 50)	50-900µm	2-36mils	18	2.5, 3, 3.5, 4, 5, 6, 8, 10, 12, 14, 16, 20, 24, 28, 32, 36	n/a

HAT-500 Hydraulic Adhesion Tester

The HAT-500 is a reliable method of testing the adhesion bond strength of a dry coating onto the substrate to which it is applied.

Correct adhesion is critical in ensuring that a paint system will perform as intended by the manufacturer. Insufficient adhesion can indicate incorrect substrate preparation or paint application.

To measure the adhesion a dolly is glued onto the painted substrate, a force is applied onto the center of the dolly by a hydraulically loaded pin, the maximum force applied is recorded on the pressure gauge by the reset needle. Should the dolly meet the minimum adhesion required it can be removed without disturbing the coating by using the heated dolly remover. Should the pressure overcome the adhesion of the dolly onto the surface the pressure will be recorded on the gauge. Dollies can be glued in place and left indefinitely as part of a scheduled maintenance programme.

The pressure gauge is swivel mounted to allow testing in any position and the flexible mid-section allows easy access. Adhesion on the internal and external surfaces of pipes can be tested using curved dollies.

The HAT-500 is supplied in a hard plastic foam filled carry case complete with 5 flat dollies, adhesive, dolly remover.

Complies with International Standards:
ISO 16276-1, ISO 4624, ASTM D 4541, NF T30-606.

ORDERING INFORMATION

Part no.	Head Type	Operation Range PSI	Operation Range MPa	Accuracy	Cal Cert Part no.
7865000	HAT-500 - Standard	0-2600 PSI	0-18	±1%	7865005
7865001	HAT-500 - Right Angle	0-2600 PSI	0-18	±1%	7865005

ACCESSORIES

Part no.	Description	Pipe Size Metric	Pipe Size Imperial	Use with HAT-500 model	Information
7865020	HAT-500 Concave Dolly	51mm	2”	7865000 / 7865001	For external pipe testing
7865021	HAT-500 Concave Dolly	76mm	3”	7865000 / 7865001	
7865022	HAT-500 Concave Dolly	102mm	4”	7865000 / 7865001	
7865023	HAT-500 Concave Dolly	152mm	6”	7865000 / 7865001	
7865024	HAT-500 Concave Dolly	203mm	8”	7865000 / 7865001	
7865025	HAT-500 Concave Dolly	254mm	10”	7865000 / 7865001	
7865026	HAT-500 Concave Dolly	305mm	12”	7865000 / 7865001	
7865027	HAT-500 Concave Dolly	356mm	14”	7865000 / 7865001	
7865028	HAT-500 Concave Dolly	406mm	16”	7865000 / 7865001	
7865029	HAT-500 Concave Dolly	457mm	18”	7865000 / 7865001	
7865030	HAT-500 Concave Dolly	508mm	20”	7865000 / 7865001	
7865031	HAT-500 Concave Dolly	610mm	24”	7865000 / 7865001	
7865032	HAT-500 Concave Dolly	762mm	30”	7865000 / 7865001	
7865033	HAT-500 Concave Dolly	914mm	36”	7865000 / 7865001	
7865034	HAT-500 Convex Dolly	152mm	6”	7865001	
7865035	HAT-500 Convex Dolly	203mm	8”	7865001	For internal pipe testing
7865036	HAT-500 Convex Dolly	254mm	10”	7865001	
7865037	HAT-500 Convex Dolly	305mm	12”	7865000 / 7865001	
7865038	HAT-500 Convex Dolly	356mm	14”	7865000 / 7865001	
7865039	HAT-500 Convex Dolly	406mm	16”	7865000 / 7865001	
7865040	HAT-500 Convex Dolly	457mm	18”	7865000 / 7865001	
7865041	HAT-500 Convex Dolly	508mm	20”	7865000 / 7865001	
7865042	HAT-500 Convex Dolly	610mm	24”	7865000 / 7865001	
7865043	HAT-500 Convex Dolly	762mm	30”	7865000 / 7865001	
7865044	HAT-500 Convex Dolly	914mm	36”	7865000 / 7865001	
7865045	HAT-500 Flat Dolly			7865000 / 7865001	For sustrate testing

SPARE PARTS

Part no.	Description
7865046	Adhesive
7865047	Spare dolly plug
7865048	Heated dolly remover

CHC-520 Cross Hatch Cutter

The CHC-520 Cross Hatch Cutter tests the adhesion of a dry coating onto the substrate to which it is applied.

Correct adhesion is critical in ensuring that a paint system will perform as intended by the manufacturer. Insufficient adhesion can indicate incorrect substrate preparation or paint application.

To measure the adhesion two sets of parallel cuts at ninety degrees to each other are made with a knife resulting in a pattern of similar sized squares. This area can be assessed by using a hard brush or adhesive tape and the results compared with the supplied chart. Different knives are available to test different coating thicknesses and substrates according to different standards.

The CHC-520 Cross Hatch Cutter is supplied in a hard plastic foam filled carry case complete with hard brush, adhesive tape, illuminated magnifier. Depending on your application a knife must be ordered separately.

Complies with International Standards:
ISO/DIN 2409, ASTM D3359.

ORDERING INFORMATION	
7865200	CHC-520 Cross Cut Adhesion Tester Kit contains • Soft grip handle • Nylon Brush • Illuminated Magnifier 2.5x • Adhesion tape, single roll, adhesion to steel 4.3 N/cm
Excl. knife, must be ordered separately	
CHC-520 knife options acc. to DIN-ISO, 6 teeth	
7865210	Teeth distance 1 mm
7865211	Teeth distance 2 mm
7865212	Teeth distance 3 mm
CHC-520 knife options acc. to ASTM, 11 teeth	
7865213	Teeth distance: 1 mm
7865214	Teeth distance: 1,5 mm
OPTIONAL ITEMS / SPARE PARTS	
7865230	Adhesion tape, single roll, adhesion to steel 4.3 N/cm
7865231	Adhesion tape, single roll, adhesion to steel 7.6 N/cm
7865232	Nylon Brush for Cross Cut Adhesion Test
7865233	Illuminated Magnifier 2.5x

CHOOSE THE RIGHT CUTTER
ISO 2409 :2003:
1 mm. spacing for coatings up to 60 µm on hard substrates
2 mm. spacing for coatings up to 60 µm on soft substrates
2 mm. spacing for coatings from 61 to 120 µm on both hard and soft substrates
3 mm. spacing for coatings from 121 µm to 250 µm on both hard / soft substrates
ASTM D3359:
1 mm. spacing for coatings up to 50 µm
1,5 mm. spacing for coatings from 50 to 125 µm

HOD-600 DC Holiday Tester

The HOD-600 Holiday Tester is used to test the integrity of a coated surface by identifying pin holes and flaws in the coating.

Pin holes or flaws in the coating may lead to premature failure of the coating – early identification allows for corrective action to be taken.

The HOD-600 Holiday Tester identifies pin holes and flaws in the coating by passing a voltage through a brush electrode which is moved over the coated surface – the voltage will spark through a pin hole or flaw to the substrate identifying the area for closer inspection. Upon identification of a pin hole or flaw an audible alarm will sound and a red indicator will flash on the unit. The application of the test is safe and does not cause burn marks or damage to the coating due to the test voltage being of high impedance.

The HOD-600 Holiday Tester can be carried by the operator using the neck strap provided due to its light weight and portable design.

The HOD-600 Holiday Tester is supplied in a hard plastic foam filled carry case complete with high voltage probe, brush electrode, earthing cable, and neck strap.

Complies with International Standards: ISO 2746, BS 1344-11, ASTM G 6, ASTM G 62, ASTM D4787, ASTM D5162, NACE RP 04901, NACE RP 0274, NACE RP 0188, JIS G3491, JIS G3492, AS 3894.1, EN14430, ANSI/AWWA C 213.

A calibration certificate traceable to UKAS is available as a cost option upon request.

ORDERING INFORMATION

Part no.	Range	Approx. maximum test thickness	Resolution	Accuracy	Cal Cert Part no.
7866000	HOD-600 - 0.5-6kV	1500µm (60mils)	0.01kV	±1%	7866005
7866001	HOD-600 - 1-20kV	5000µm (200mils)	0.1kV	±1%	7866005
7866002	HOD-600 - 1-30kV	7500µm (300mils)	0.1kV	±1%	7866005

The HOD-600 is supplied with a European style plug, other plug options available upon request.

ACCESSORIES

Part no.	Product	Size Metric	Size Imperial	Extension Size	Information
7866030	Extension rod	500mm	20″		To extend electrodes for applications where a long reach is required.
7866031	Extension rod	1000mm	40″		
7866040	Broad Brush 45° Angle	200mm	8″	200mm / 8″	Brass-filled Brushes for the testing of coatings on large flat areas.
7866041	Broad Brush 45° Angle	500mm	20″	200mm / 8″	
7866050	Conductive Rubber 180° In Line	200mm	8″	200mm / 8″	Conductive Rubber Electrodes for the testing of coatings on large flat areas.
7866051	Conductive Rubber 180° In Line	450mm	18″	200mm / 8″	
7866060	Circular Brush and Assembly	51mm	2″	200mm / 8″	Conductive Rubber Electrodes for the testing of coatings on large flat areas. All Brushes come complete with the connector assembly.
7866061	Circular Brush and Assembly	76mm	3″	200mm / 8″	
7866062	Circular Brush and Assembly	102mm	4″	200mm / 8″	
7866063	Circular Brush and Assembly	152mm	6″	200mm / 8″	
7866064	Circular Brush and Assembly	203mm	8″	200mm / 8″	
7866065	Circular Brush and Assembly	254mm	10″	200mm / 8″	
7866066	Circular Brush and Assembly	305mm	12″	200mm / 8″	
7866070	Rolling Spring	102mm	4″	Order SA490	3/4″ phosphor bronze Rolling Spring for the testing of coatings on the external diameter of pipes. All Rolling Springs require the 7866084 Rolling Spring Connector Assembly. One assembly can be used on multiple Rolling Springs. The 7866085 Rolling Spring Pusher Assembly is suitable for larger Rolling Springs, to assist the travel of the spring along the pipe.
7866071	Rolling Spring	152mm	6″	Order SA490	
7866072	Rolling Spring	203mm	8″	Order SA490	
7866073	Rolling Spring	254mm	10″	Order SA490	
7866074	Rolling Spring	305mm	12″	Order SA490	
7866075	Rolling Spring	356mm	14″	Order SA490	
7866076	Rolling Spring	406mm	16″	Order SA490	
7866077	Rolling Spring	457mm	18″	Order SA490	
7866078	Rolling Spring	508mm	20″	Order SA490	
7866079	Rolling Spring	610mm	24″	Order SA490	
7866080	Rolling Spring	762mm	30″	Order SA490	
7866081	Rolling Spring	914mm	36″	Order SA490	
7866082	Rolling Spring	1067mm	42″	Order SA490	
7866083	Rolling Spring	1220mm	48″	Order SA490	
7866084	Rolling Spring Connector Assy			200mm / 8″	
7866085	Rolling Spring Pusher Assembly			200mm / 8″	

PHD-620 Pin Hole Detector

The PHD-620 Pin Hole Detector is used to test the integrity of a coated surface by identifying pin holes and flaws in the coating.

Pin holes or flaws in the coating may lead to premature failure of the coating – early identification allows for corrective action to be taken.

The PHD-620 Pin Hole Detector identifies pin holes and flaws in the coating by passing a selectable voltage of 9 volts, 67.5 volts, or 90 volts, through a wet sponge which is moved over the coated surface. The voltage will make a path through the wetting agent to the pin hole or flaw in the substrate, an audible alarm will sound and a red light will flash on the unit identifying the area for closer inspection. The application of the test is safe and does not cause burn marks or damage to the coating.

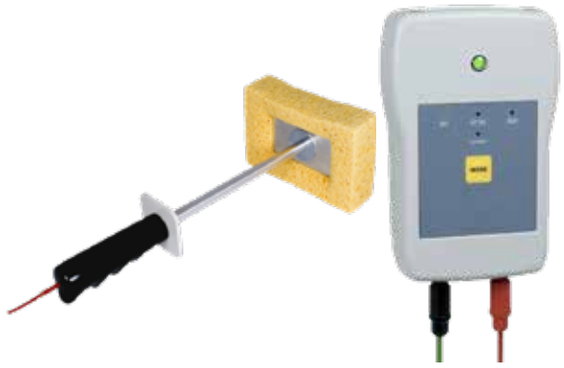

The PHD-620 Pin Hole Detector can be carried by the operator due to its light weight and portable design.

The PHD-620 Pin Hole Detector is supplied in a hard plastic foam filled carry case complete with 150mm broad sponge assembly, and earthing cable.

A calibration certificate traceable to UKAS is available as a cost option upon request.

Complies with International Standards:
BS EN ISO 8289 A, BS 7793-2, ASTM D-5162, ASTM G62-87, ASTM G6-83, NACE RP 0188

ORDERING INFORMATION

Part no.	Range	Maximum Test Thickness 9V	Maximum Test Thickness 67.5V	Maximum Test Thickness 90V	Accuracy	Sponge Size	Cal. Cert. Part No.
7866200	9V/67.5V/90V	300µm 12mils	500µm 20mils	500µm 20mils	±1%	150 x 100 x 30mm	7866211

ACCESSORIES

Part no.	Product	Size Metric	Size Imperial	Extension Size	Information
7866210	Extension rod	500mm	20″		To extend Sponges for applications where a long reach is required.
7866220	Extension rod	1000mm	40″		
7866230	Circular Sponge and Assembly	50mm	2″	200mm / 8″	Circular Sponges for the testing of internal diameters of pipes.
7866240	Circular Sponge and Assembly	100mm	4″	200mm / 8″	
7866250	Flat Sponge and Assembly	200mm	8″	200mm / 8″	For coatings on large flat areas.
7866260	Earth Cable	10m			Larger testing area Earth Cables.

Section 11 - Abrasives

Product	Page
High carbon steel shot & grit	226
Low carbon steel shot	228
Stainless steel shot	229
Chilled iron grit	230
Stainless steel cut wire	231
Carbon steel cut wire	232
Aluminium cut wire	233
Zinc cut wire	234
Brown fused alumina	235
White fused alumina	236
Garnet	237
Glass beads	238
Aluminium silicate	239

High Carbon Steel Shot & Grit

AIRBLAST

Steel Shot	Steel Grit	Application
S780/SS2.5 S660/SS2.0	G10/SG2.5 G12/SG2.0	Sand removal of large sized castings, scale removal of large sized products from forging, stamping, dieforging, drawing and rolling or after heat treatment (e.g. pipes, sections, plates, fittings, wire).
S550/SS1.7 S460/SS1.4	G16/SG1.4 G14/SG1.7	Sand removal of large and medium sized castings, scale removal of forging and heat-treated work pieces, surface blast cleaning of steel plates, sections and steel structures, shot peening of work pieces, cutting of granite.
S390/SS1.2 S330/SS1.0	G18/SG1.2 G25/SG1.0	Sand removal of medium and small sized castings, surface blast cleaning of forgings, heat-treated pieces, steel pipes, sections and steel structures, surface treatment before painting, shot peening of work pieces.
S280/SS0.8 S230/SS0.6	G25/SG1.0 G40/SG0.7	Surface blast cleaning of small sized castings, forgings and heat-treated pieces, aluminium and copper alloy castings, steel plates, steel pipes, sections and steel structures, shot peening of work pieces.
S170/SS0.5 S110/SS0.3	G50/SG0.4 G80/SG0.3 G120/SG0.2	Surface blast cleaning of stainless steel plates, thin steel plates, non ferrous alloys, dacromet coat.

SPECIFICATION HIGH CARBON STEEL SHOT					
Chemical composition	(C): 0.80 - 1.20%	(Mn): 0.35 - 1.20%	(Si): ≥ 0.40	(S): ≤ 0.05%	(P): ≤ 0.05%
Hardness	40 - 50HRC, 52 - 56HRC, 56 - 60HRC				
Hardness deviation	Max. deviation ±3.0 HRC				
Microstructure	Tempered martensite or sorbite				
Density	7.4 g/cm³				
Bulk density	4.4 g/cm³				

mesh	mm	SS-2.5	SS-2.0	SS-1.7	SS-1.4	SS-1.2	SS-1.0	SS-0.8	SS-0.6	SS-0.5	SS-0.3
7	2.80	all pass									
8	2.36		all pass								
10	2.00	85%min		all pass	all pass						
12	1.70	97%min	85%min		5%max	all pass					
14	1.40		97%min	85%min		5%max	all pass				
16	1.18			97%min	85%min		5%max	all pass			
18	1.00				96%min	85%min		5%max	all pass		
20	0.850					96%min	85%min		10%max	all pass	
25	0.710						96%min	85%min		10%max	
30	0.600							96%min	85%min		all pass
35	0.500								97%min		10%max
40	0.425									85%min	
45	0.355									97%min	
50	0.300										80%min
80	0.180										90%min
120	0.125										
200	0.075										
325	0.045										
SAE J444		S-780	S-660	S-550	S-460	S-390	S-330	S-280	S-230	S-170	S-110

High Carbon Steel Shot & Grit

SPECIFICATION HIGH CARBON STEEL GRIT					
Chemical composition	(C): 0.80 - 1.20%	(Mn): 0.60 - 1.20%	(Si): ≥ 0.40	(S): ≤ 0.05%	(P): ≤ 0.05%
Hardness	GP: 42 - 52HRC, GL: 53 - 60HRC, GH: 60 - 64HRC				
Hardness deviation	Max. deviation ±3.0 HRC				
Microstructure	Tempered martensite or sorbite				
Density	7.6 g/cm³				
Bulk density	4.2 g/cm³				

mesh	mm	SG-2.5	SG-2.0	SG-1.7	SG-1.4	SG-1.2	SG-1.0	SG-0.7	SG-0.4	SG-0.3	SG-0.2
7	2.80	all pass									
8	2.36		all pass								
10	2.00	80%min		all pass							
12	1.70	90%min	80%min		all pass						
14	1.40		90%min	80%min		all pass					
16	1.18			90%min	75%min		all pass				
18	1.00				85%min	75%min		all pass			
20	0.850										
25	0.710					85%min	70%min		all pass		
30	0.600										
35	0.500										
40	0.425						80%min	70%min		all pass	
45	0.355										
50	0.300							80%min	65%min		all pass
80	0.180								75%min	65%min	
120	0.125									75%min	60%min
200	0.075										70%min
325	0.045										
SAE J444		G-10	G-12	G-14	G-16	G-18	G-25	G-40	G-50	G-80	G-120

Low Carbon Steel Shot

AIRBLAST

Product and Applications

Low carbon steel shot has a lower hardness than high carbon steel shot. Because of its microstructure it resist impact well until the moment it suddenly scatters and turns into dust.

It is often used for flash descaling. Since low carbon steel shot is softer it not possible to crush it into grit, which is therefore not available.

Chemical composition

C (%)	Mn (%)	Si (%)	S (%)	P (%)
0.10-0.17	1.00	0.10-0.25	< 0.035	< 0.035

Physical properties

Grain shape : Spherical
Hardness : 40-45 HRC
Microstructure : Bainitic
Density : ≥ 7.5 g/cm³
Bulk density : Approx. 4.4 g/cm³

Sizes

mesh	mm	SS-2.5	SS-2.0	SS-1.7	SS-1.4	SS-1.2	SS-1.0	SS-0.8	SS-0.6	SS-0.5	SS-0.3
7	2.80	all pass									
8	2.36		all pass								
10	2.00	85%min		all pass	all pass						
12	1.70	97%min	85%min		5%max	all pass					
14	1.40		97%min	85%min		5%max	all pass				
16	1.18			97%min	85%min		5%max	all pass			
18	1.00				96%min	85%min		5%max	all pass		
20	0.850					96%min	85%min		10%max	all pass	
25	0.710						96%min	85%min		10%max	
30	0.600							96%min	85%min		all pass
35	0.500								97%min		10%max
40	0.425									85%min	
45	0.355									97%min	
50	0.300										80%min
80	0.180										90%min
120	0.125										
200	0.075										
325	0.045										
SAE J444		S-780	S-660	S-550	S-460	S-390	S-330	S-280	S-230	S-170	S-110

Other sizes on request.

Packaging

- 25 kgs. PE bags on EURO-pallet (max. 1000 kgs.)
- 1000 kgs. in big bags
- Other packaging on request.

Stainless Steel Shot

AIRBLAST

Product and Applications

Companies which are casting or fabricating stainless, aluminum or light alloy parts can safely use stainless steel abrasives, since they secure the parts from ferrous residue contamination and it achieves effective blasting performances.

Stainless steel abrasives are very durable and are being used for deburring, blast cleaning and surface finishing.

Chemical composition

AISI 410:

C (%)	Mn (%)	Si (%)	Cr (%)	Ni (%)	P (%)	S (%)	Cu (%)	N (%)
0.018	0.38	0.3	12.2	0.1	0.016	0.001	0.03	0.02

AISI 430:

C (%)	Mn (%)	Si (%)	Cr (%)	Ni (%)	P (%)	S (%)	Cu (%)	N (%)
0.11	0.38	0.3	16.15	0.1	0.016	0.001	0.03	0.02

AISI 202:

C (%)	Mn (%)	Si (%)	Cr (%)	Ni (%)	P (%)	S (%)	Cu (%)	N (%)
0.88	10.7	0.7	17.08	4.15	0.036	0.028	0.04	0

AISI 205:

C (%)	Mn (%)	Si (%)	Cr (%)	Ni (%)	P (%)	S (%)	Cu (%)	N (%)
0.105	15.4	0.52	12.7	2.06	0.029	0.028	0.03	0

AISI 304:

C (%)	Mn (%)	Si (%)	Cr (%)	Ni (%)	P (%)	S (%)	Cu (%)	N (%)
0.065	1.1	0.6	18.03	8.02	0.036	0.012	0	0.04

Physical properties

Grain shape : Spherical
Hardness : 32-50 HRC
Tensile intensity : 490-1520 Mpa
Microstructure : AISI 304: Deformed Austenite
AISI 430/410: Deformed Ferrite
Density : 7.8 g/cm³
Bulk density : 4.5 g/cm³

Sizes

0.3 mm	0.9 mm	1.5 mm
0.4 mm	1.0 mm	1.6 mm
0.5 mm	1.1 mm	1.7 mm
0.6 mm	1.2 mm	1.8 mm
0.7 mm	1.3 mm	1.9 mm
0.8 mm	1.4 mm	2.0 mm

Other sizes on request

Packaging

- 25 kgs. PE bags on EURO-pallet (max. 1000 kgs.)
- 1000 kgs. in big bag

Chilled Iron Grit

AIRBLAST

Product and Applications

Chilled iron is a hard abrasive making it suitable for etching purposes, but less resistant to impact. During the blasting process chilled iron breaks at an angle producing a permanent mixture of sharp grit with the ability to roughen up the hardest surface and clean quickly.

It is suitable to be used in blast rooms for fast cleaning and edging but should not be used in shot blast machines, since it quickly wears down the machines parts.

Chemical composition

C	Si	Mn	P	S	Fe
2,90 - 3,40 %	0,8 - 1,50 %	0,30 – 1,00 %	< 0,35 %	< 0,17 %	> 93 %

Physical properties

Grain shape : angular
Hardness : ≥ 56 HRC
Bulk density : 3,0 to 5,0 g/cm³
Microstructure : martensitic
Density : ≥ 7.0 g/cm³

Sizes

G80	2.0-2.8 mm	G24	0.6-1.0 mm
G66	1.7-2.4 mm	G17	0.42-0.85 mm
G55	1.4-2.0 mm	G12	0.3-0.71 mm
G47	1.2-1.7 mm	G07	0.18-0.42 mm
G39	1.0-1.4 mm	G05	0.12-0.3 mm
G34	0.85-1.2 mm	G02	≤ 0.13 mm

Other sizes on request.

Packaging

- 25 kgs. bags on EURO-pallet (max. 1000 kgs.)
- Other packaging upon request

Stainless Steel Cut Wire

AIRBLAST

Product and Applications

Stainless Steel Cut Wire is used for cleaning and peening applications where ferrous contamination can't be tolerated. It produces a very bright surface, maintains its shape longer then cast abrasives and it produces a dust free surface.

Stainless Steel Cut Wire is available as cut or conditioned and with various chemical compositions.

Chemical composition

AISI 410:

C (%)	Mn (%)	Si (%)	Cr (%)	Ni (%)	P (%)	S (%)	Cu (%)	N (%)
0.018	0.38	0.3	12.2	0.1	0.016	0.001	0.03	0.02

AISI 430:

C (%)	Mn (%)	Si (%)	Cr (%)	Ni (%)	P (%)	S (%)	Cu (%)	N (%)
0.11	0.38	0.3	16.15	0.1	0.016	0.001	0.03	0.02

AISI 202:

C (%)	Mn (%)	Si (%)	Cr (%)	Ni (%)	P (%)	S (%)	Cu (%)	N (%)
0.88	10.7	0.7	17.08	4.15	0.036	0.028	0.04	0

AISI 205:

C (%)	Mn (%)	Si (%)	Cr (%)	Ni (%)	P (%)	S (%)	Cu (%)	N (%)
0.105	15.4	0.52	12.7	2.06	0.029	0.028	0.03	0

AISI 304:

C (%)	Mn (%)	Si (%)	Cr (%)	Ni (%)	P (%)	S (%)	Cu (%)	N (%)
0.065	1.1	0.6	18.03	8.02	0.036	0.012	0	0.04

Physical properties

Grain shape	:	Cylindrical or round
Hardness	:	308-509 HV (depending on size & grain shape)
Tensile intensity	:	490-1520 Mpa
Microstructure	:	AISI 304: Deformed Austenite AISI 430/410: Deformed Ferrite
Density	:	7.8 g/cm³
Bulk density	:	4.5 g/cm³

Sizes

0.3 mm	0.9 mm	1.5 mm
0.4 mm	1.0 mm	1.6 mm
0.5 mm	1.1 mm	1.7 mm
0.6 mm	1.2 mm	1.8 mm
0.7 mm	1.3 mm	1.9 mm
0.8 mm	1.4 mm	2.0 mm

Other sizes on request

Packaging

- 25 kgs. PE bags on EURO-pallet (max. 1000 kgs.)
- 1000 kgs. in big bag

Carbon Steel Cut Wire

AIRBLAST

Product and Applications

Carbon steel cut wire are made of from steel wire cut in pieces. The cylindrical cut wire is mainly used in the foundry and construction industries for heavy duty applications like de-sanding, descaling and cleaning.

The cylindrical cut wire achieves a high cleaning efficiency and has a long service life.

Chemical composition

C (%)	Mn (%)	Si (%)	S (%)	P (%)	Fe (%)
0.45-0.70	0.30-1.30	0.15-0.35	≤ 0.05	≤ 0.04	The remaining

Physical properties

Grain shape : Cylindrical
Hardness : 41-53 HRC
Tensile intensity : 1300-2200 Mpa
Microstructure : Deformed pearlite
Density : 7.8 g/cm³
Bulk density : 4.5 g/cm³

Sizes

0.4 mm	0.8 mm
0.5 mm	0.9 mm
0.6 mm	1.0 mm
0.7 mm	1.1 mm

Other sizes on request.

Packaging

- 25 kgs. PE bags on EURO-pallet (max. 1000 kgs.)
- Other packaging on request.

Aluminium Cut Wire

AIRBLAST

Product and Applications

Aluminium Cut Wire shot is used for the blast cleaning, surface finishing and deburring of mainly aluminium castings and forgings.

It is very durable and leaves no ferrous residue on the substrate.

Chemical composition

Al
99%

Physical properties

Grain shape : Cylindrical
Hardness : 40-50 HV
Tensile intensity : 80-240 Mpa
Microstructure : Deformed α
Density : 2.7 g/cm³
Bulk density : 1.5 g/cm³

Sizes

0.6 mm	1.4 mm
0.8 mm	1.5 mm
0.9 mm	1.6 mm
1.0 mm	1.7 mm
1.1 mm	1.8 mm
1.2 mm	1.9 mm
1.3 mm	2.0 mm

Packaging

- 12,5 kgs. PE bags on EURO-pallet (max. 1000 kgs.)
- 1000 kgs. in big bag

Zinc Cut Wire

AIRBLAST

Product and Applications

Zinc Cut Wire is a relatively soft abrasive with a high denisity giving it good kentic energy. It creates less dust then steel or aluminum abrasives, has a long life cycle and causes relatively low wear on machine parts.

Zinc Cut Wire is used in applications where a soft material is required for de-flashing and deburring zinc or aluminium die castings and it is also used to strip paint and powder coatings without damaging the substrate.

Chemical composition

Zn
> 99.99 %

Physical properties

Grain shape	:	Angular
Hardness	:	45-50 HV
Tensile intensity	:	90-120 Mpa
Microstructure	:	Deformed α
Density	:	7.1 g/cm³
Bulk density	:	4.1 g/cm³

Sizes

0.6 mm	1.4 mm
0.8 mm	1.5 mm
0.9 mm	1.6 mm
1.0 mm	1.7 mm
1.1 mm	1.8 mm
1.2 mm	1.9 mm
1.3 mm	2.0 mm

Other sizes on request.

Packaging

- 12,5 kgs. PE bags on EURO-pallet (max. 1000 kgs.)
- 1000 kgs. in big bag

Brown Fused Alumina

AIRBLAST

Product and Applications

Brown fused Alumina is mainly used as a recyclable abrasive in blast cabinets and blast rooms. Because of its low iron content, alumina is often used in blasting operations where iron contamination on the non-ferrous metal substrate is not allowed. Aluminium oxide is a very hard and sharp abrasive that cleans rapidly.

It leaves an anchor profile prior to coating and is suitable for removal of scale, rust and old coatings. Furthermore it is used for ceramic grinding wheels, refractory applications and polishing and grinding.

Chemical composition

Al_2O_3	TiO_2	Fe_2O_3	SiO_2
Min. 94,5 %	Max. 3,7 %	Max. 0,6 %	Max. 0,7 %

Physical properties

Grain shape : Angular
Hardness : 9.0 mohs
Bulk density : 1.70 - 1.92 g/cm³
Specific gravity : min. 3.90 g/cm³
Colour : Brown

Sizes

F08	2000-2800 µm	F46	300 - 425 µm
F10	1700-2360 µm	F54	250 - 355 µm
F12	1400-2000 µm	F60	212 - 300 µm
F14	1180-1700 µm	F70	180 - 250 µm
F16	1000-1400 µm	F80	150 - 212 µm
F20	850-1180 µm	F90	125 - 180 µm
F22	710-1000 µm	F100	106 - 150 µm
F24	600 - 850 µm	F120	90 - 125 µm
F30	500 - 710 µm	F150	63 - 106 µm
F36	425 - 600 µm	F180	63 - 90 µm
F40	355 - 500 µm	F220	53 - 75 µm

Packaging

- 40 x 25 kgs. bags on EURO format pallet (1000 kgs.)
- 1000 kgs. in big bag

White Fused Alumina

AIRBLAST

Product and Applications

White Fused Alumina is mainly used is as a recyclable abrasive in blast cabinets and blast rooms, where high purity of the abrasive is required. Because of its low iron content, white fused alumina is often used in blasting operations where iron contamination on the non-ferrous metal substrate is not allowed.

White Fused Alumina is the purest alumina and it is very hard and sharp with a fast cleaning rate.

Chemical composition

Al_2O_3	Na_2O	Fe_2O_3	SiO_2
99.58%	0.33%	0.03%	0.06%

Physical properties

Grain shape : Angular
Hardness : 9.0 mohs
Bulk density : 1.4 - 2.1 g/cm³
Specific gravity : min. 3.95 g/cm³
Colour : White

Sizes

F08	2000-2800 µm	F46	300 - 425 µm
F10	1700-2360 µm	F54	250 - 355 µm
F12	1400-2000 µm	F60	212 - 300 µm
F14	1180-1700 µm	F70	180 - 250 µm
F16	1000-1400 µm	F80	150 - 212 µm
F20	850-1180 µm	F90	125 - 180 µm
F22	710-1000 µm	F100	106 - 150 µm
F24	600 - 850 µm	F120	90 - 125 µm
F30	500 - 710 µm	F150	63 - 106 µm
F36	425 - 600 µm	F180	63 - 90 µm
F40	355 - 500 µm	F220	53 - 75 µm

Packaging

- 25 kgs. PE bags on EURO-pallet (max. 1000 kgs.)
- 1000 kgs. in big bag

Garnet

AIRBLAST

Product and Applications

Garnet is a natural mineral abrasive which is irregularly shaped with polished edges, it contains no heavy materials and has a low level of free silica. Because garnet is very heavy and hard for a mineral abrasive it accomplishes a fast cleaning or cutting rate. Our garnet is the abrasive of choice for water jet cutting and blasting applications. Some of the advantages of garnet are; fast cleaning and cutting, relatively low dust generation as compared to copper- or coal slag, environmental friendly and reusability.

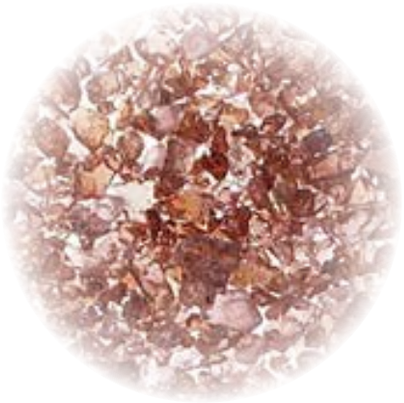

Chemical composition

Almandine Garnet	Fe3Al2(SiO4) 3	80-85%
Ilmenite	FeTiO3	15-20%

**** Full analysis on application**

Physical properties

Grain Shape : Angular
Colour : Red / Pink
Hardness : 7,8 - 8,00 Mohs
Bulk density : 2,30 g/cm3
Specific Gravity : 4,10 g/cm3
Chlorides : < 30 ppm
Conductivity : < 250 µS/cm (test method ISO 11127)

Sizes

Grade	Profile range (µm)	Size range (µm)
Waterjet cutting		
W80		150-425
W120		125-300
Blasting		
20/60	65-95	250-850
30/60	50-75	250-600
20/40	70-110	425-850

Packaging

- 25 kgs. pp bags in a big bag - (1000 kgs.)
- 1 ton in big bag
- 2 tons in big bag

Glass Beads

AIRBLAST

Product and Applications

Glass beads are a reusable abrasive and are mainly used in blast rooms and blast cabinets. Glass beads contain no free iron to cause corrosion on non-ferrous surfaces, therefor glass beads are very suitable to use on all types of metals.

Since it doesn't create an anchor profile, it is mainly used to clean a substrate without roughening it or to polish the surface.

Chemical composition

Al_2O_3	TiO_2	Fe_2O_3	SiO_2	CaO	MgO
0.50-2.0 %	> 14 %	< 0,15 %	> 65.0 %	> 8,0 %	> 2,5 %

Physical properties

Grain shape : Spherical
Hardness : approx. 6 - 7 mohs
Bulk density : approx. 1.4 - 1.7 g/cm³
Specific gravity : 2.3 - 2.6 g/cm³
Colour : White / transparent

Sizes

0 - 50 µm	150-250 µm
40 -70 µm	200-300 µm
70-110 µm	300-400 µm
90-150 µm	400-600 µm
100-200 µm	600-800 µm

Packaging

- 25 kgs. PE bags on EURO-pallet (max. 1000 kgs.)
- 1000 kgs. in big bag

Aluminium Silicate

AIRBLAST

Product and Applications

Also known as coal slag is a dispensable abrasive which is a by-product of coal fired electric power generation plants.

Our aluminium silicate generates less dust than copper slag and is mainly used in open blasting operations in the oil- and shipyard industry.

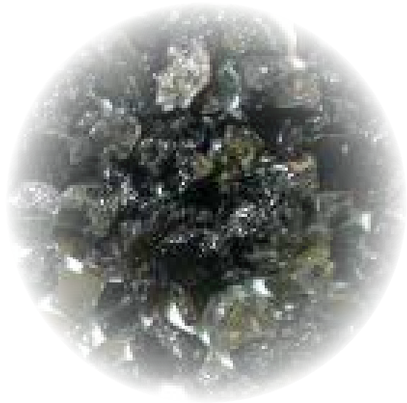

Chemical composition

Silicon dioxide	Aluminium oxide	Iron(III) oxide	Calcium oxide	Potassium oxide
42-58%	23-32%	3-15%	2-8.5%	0.5-4.6%

Physical properties

Grain density : 2.4 - 2.6 kg/dm³
Bulk density : 1.05 - 1.4 kg/dm³
Hardness : min. 6 Mohs

Sizes

0.2 - 0.5 mm	0.5 - 1.4 mm
0.2 - 1.0 mm	0.5 - 2.0 mm
0.2 - 1.4 mm	1.0 - 2.0 mm
0.2 - 2.0 mm	1.4 - 2.8 mm

Other sizes on request.

Packaging

- 42 X 25 kg paper bags on EURO-pallet (1050 kgs.)
- 1000/1500 kgs. in big bag
- in bulk

Notes

Section 12 - Tips & Tricks

AIRBLAST

Subject	Page
Blasting - Nozzle Pressure/Diameter/Service Life/Air Volume	241
Blasting - Nozzle Selector Type Guide / Air Line Sizes	243
Blasting - Steel Surface Finish Standards	244
Blasting - Abrasive Blast Performance Guide	245
Blasting - Checking Compressed Air Quality	246
Painting - Paint Application Tables	247
Painting - Paint Application Information	248
Inspection - Surface Profile	249
Inspection - Surface Cleanliness Factors	250
Inspection - Climatic Conditions for Safe Painting	252
Abrasives - Abrasive Characteristic Comparison	253
Conversion factors	254

Nozzle Pressure/Diameter/Service Life/Air Volume

ORIFICE (mm) (“)	NOZZLE PRESSURE / NOZZLE DIAMETER GUIDE														
	60 PSI	4.2 BAR	70 PSI	4.9 BAR	80 PSI	5.6 BAR	90 PSI	6.3 BAR	100 PSI	7.0 BAR	120 PSI	8.5 BAR			
5.0 mm 3/16”	30.0 171.0 7	0.85 77.00 5.3	33.0 196.0 8	0.93 89.00 5.6	38.0 216.0 9	1.08 96.00 6.4	41.0 238.0 10	1.16 108.00 7.1	45.0 264.0 10	1.27 120.00 7.5	58.0 375.0 12	1.64 170.00 9.0	REQUIRED AIR REQUIRED ABRASIVE REQUIRED POWER	CFM Lbs./hr. hp	m^3/min KG/hr. * kw
6,5 mm 4/16”	54.0 312.0 12	1.53 141.00 9.0	61.0 354.0 14	1.73 160.00 10.1	68.0 408.0 16	1.93 185.00 11.6	74.0 448.0 17	2.10 203.00 12.4	81.0 494.0 18	2.29 224.00 13.5	105.0 660.0 22	2.97 300.00 16.2	REQUIRED AIR REQUIRED ABRASIVE REQUIRED POWER	CFM Lbs./hr. hp	m^3/min KG/hr. * kw
8.0 mm 5/16”	89.0 534.0 20	2.52 242.00 15.0	101.0 604.0 23	2.86 274.00 19.1	113.0 672.0 26	3.20 305.00 20.2	126.0 740.0 28	3.57 335.00 21.0	137.0 850.0 31	3.88 385.00 22.9	160.0 1.050.0 37	4.53 476.00 27.5	REQUIRED AIR REQUIRED ABRASIVE REQUIRED POWER	CFM Lbs./hr. hp	m^3/min KG/hr. * kw
9.5 mm 6/16”	126.0 764.0 28	3.57 346.00 21.0	143.0 864.0 32	4.05 392.00 24.0	161.0 960.0 36	4.56 425.00 27.0	173.0 1.052.0 39	4.90 477.00 28.9	196.0 1.152.0 44	5.55 523.00 33.0	235.0 1.475.0 52	6.65 669.00 39.6	REQUIRED AIR REQUIRED ABRASIVE REQUIRED POWER	CFM Lbs./hr. hp	m^3/min KG/hr. * kw
11.0 mm 7/16”	170.0 1.032.0 38	4.81 468.00 28.5	184.0 1.176.0 44	5.21 533.00 32.6	217.0 1.312.0 49	6.14 595.00 36.4	240.0 1.448.0 54	6.80 657.00 40.1	254.0 1.584.0 57	7.19 719.00 42.4	315.0 2.050.0 69	8.92 930.00 50.9	REQUIRED AIR REQUIRED ABRASIVE REQUIRED POWER	CFM Lbs./hr. hp	m^3/min KG/hr. * kw
12.5 mm 8/16”	224.0 1.336.0 50	6.34 606.00 37.5	252.0 1.512.0 56	7.14 686.00 42.0	280.0 1.680.0 63	7.93 762.00 46.9	309.0 1.856.0 69	8.75 842.00 51.8	338.0 2.024.0 75	9.57 918.00 56.3	410.0 2.650.0 90	11.61 1.202.00 67.6	REQUIRED AIR REQUIRED ABRASIVE REQUIRED POWER	CFM Lbs./hr. hp	m^3/min KG/hr. * kw

Chart shows calculated consumption rates of air and abrasive for new nozzles. When slecting a compressor add 50% to above figures to allow for normal nozzle wear and friction loss.
* Based on abrasive density of 1,5 kgs. per liter.

NOTE: Figures may vary depending upon working conditions. To maintain desired air pressure as nozzle orifice wears, air consumption increases. The effects of nozzle wear on air consumption must be considered when selecting nozzles and the compressors that support them.

Approximate nozzle service life in hours*

Nozzle material	Steel shot and grit	Expendable abrasives	Alu-oxide abrasives
Tungsten carbide	500-800	300-400	20-40
Silicon carbide and nitride	600-1000	400-600	50-100
Boron carbide	1500-2500	750-1500	200-1000

* Estimated values for comparison. Actual service life will vary depending upon blast pressure, media size and particle shape.

Minimum Air Volume Table
Air Volume Requirements at 100 PSI for a Complete Blast System

Nozzle	Size of orifice	Volume of air	Plus helmet	Plus 50% (reserve)	Minimum air required
No. 4	1/4” 6.5 mm	81 2.3	20 0.5	50 1.4	151 cfm 4.2 m³/min.
No. 5	5/16” 8.0 mm	137 3.9	20 0.5	79 2.2	236 cfm 6.6 m³/min.
No. 6	3/8” 9.5 mm	196 5.5	20 0.5	108 3.0	324 cfm 9.0 m³/min.
No. 7	7/16” 11.0 mm	254 7.2	20 0.5	137 3.9	411 cfm 11.6 m³/min.
No. 8	1/2” 12.5 mm	338 9.6	20 0.5	179 5.0	537 cfm 16.1 m³/min.

Nozzle Selector Type Guide / Air Line Sizes

AIRBLAST

TYPE	CASING	LINER	LENGHT			INLET		THREAD		ORIFICE SIZE RANGE	
			Short	Medium	Long	1"	1¼"	FINE	LARGE (50 mm)	IN MM	IN INCHES
ATSD	ALUMINIUM	TUNGSTEN CARBIDE			☐	☐		☐		5.0 – 12.5	3/86" – ½"
ATSDX	ALUMINIUM	TUNGSTEN CARBIDE			☐		☐	☐		6.5 – 19.0	¼" – ¾"
ATSDX-X/50	ALUMINIUM	TUNGSTEN CARBIDE			☐		☐		☐	6.5 – 19.0	¼" – ¾"
RJL-X/50	ALU. / RUBBER SLEEVED	TUNGSTEN CARBIDE			☐		☐		☐	5.0 – 19.0	3/16" – ¾"
ATJD	ALUMINIUM	TUNGSTEN CARBIDE		☐		☐		☐		5.0 – 12.5	3/16" – ½"
ATJDX	ALUMINIUM	TUNGSTEN CARBIDE		☐			☐	☐		8.0 – 16.0	5/16" – 5/8"
ATJDX-X/50	ALUMINIUM	TUNGSTEN CARBIDE		☐			☐		☐	8.0 – 16.0	5/16" – 5/8"
AT	ALUMINIUM	TUNGSTEN CARBIDE	☐					☐		3.0 – 12.5	1/8" – ½"
ATL	ALUMINIUM	TUNGSTEN CARBIDE	☐						☐	3.0 – 12.5	1/8" – ½"
AAM-X/50	ALUMINIUM	TUNGSTEN CARBIDE		☐		☐			☐	3.0 – 9.5	1/8" – 3/8"
ABSN-X/50	POLYURETHANE	SILICON NITRIDE			☐		☐		☐	5.0 – 12.5	3/16" – ½"
ABCL-X/50	ALUMINIUM	BORON CARBIDE			☐	☐			☐	6.5 – 12.5	¼" – ½"

Minimum Compressor Air Line Sizes

Nozzle orifice size	Minimum air line ID
1/4" (6.5mm)	1" (25mm)
5/16" (8.0mm)	1 1/4" (32mm)
3/8" (9.5mm)	1 1/2" (38mm)
7/16" (11.0mm)	2" (50mm)
1/2" (12.5mm)	2" (50mm)
5/8" (16.0mm)	2 1/2" (64mm)
3/4" (19mm)	3" (76mm)

COMPATIBILITY GUIDE

No.	Nozzle Orifice	Recommended range		Minimum Blast Machine capacity	Minimum Pipe ID	Blast Hose ID	Minimum Air Hose ID
		m³/min	CFM				
3	5.0 mm	1.27 - 2.29	45 - 81	60 ltr.	1"	¾"	1"
4	6.5 mm	2.29 - 3.88	81 - 137	60 ltr.	1"	1" - 1¼"	1¼"
5	8.0 mm	3.88 - 5.55	137 - 196	100 ltr.	1"	1" - 1¼"	1¼"
6	9.5 mm	5.55 - 7.19	196 - 254	200 ltr.	1¼"	1¼"	1½"
7	11.0 mm	7.19 - 9,57	254 - 338	200 ltr.	1¼"	1¼" - 1½"	2"
8	12.5 mm	9.57 - 15.52	338 - 548	200 ltr.	1¼"	1½"	2"

Note: Best performance is obtained when sizes of nozzle, blast machine piping, blast hose and air hose are properly matched.

- m³/min and CFM range is based on blasting at 7 bar (100 psi) for the life of the nozzle.
- Blast machine capacity should allow 20 to 30 minutes of blasting.
- Hose ID should be three to four times the size of the nozzle orifice.

Steel Surface Finish Standards

AIRBLAST

RUST GRADES

Brush-Off Blast Cleaning (SA 1)

Removal of loose mill scale, loose rust, and loose paint, to the degree hereafter specified, by the impact of abrasives propelled through nozzles or by centrifugal wheels. It is not intended that the surface shall be free of all mill scale, rust, and paint. The remaining mill scale, rust, and paint should be tight and the surface should be sufficiently abraded to provide good adhesion and bonding of paint. A brush-off blast cleaned surface finish is defined as one from which all oil, grease, dirt, rust scale, loose mill scale, loose rust and loose paint or coatings are removed completely but tight mill scale and tightly adhered rust, paint and coatings are permitted to remain provided that all mill scale and rust have been exposed to the abrasive blast pattern sufficiently to expose numerous flecks of the underlying metal fairly uniformly distributed over the entire surface.

SSPC-SP-7 Steel Structures Painting Council (USA)
SA 1 Swedish Standards Organization
NACE 4 National Organization of Corrosion Engineers (USA)

Commercial Blast Cleaning (SA 2)

Removal of partial mill scale, rust, rust scale, paint or foreign matter by the use of abrasives propelled through nozzles or by centrifugal wheels, to the degree specified. A commercial blast cleaned surface finish is defined as one from which all oil, grease, dirt, rust scale and foreign matter have been completely removed from the surface and all rust, mill scale and old paint have been completely removed except for slight shadows, streaks, or discoloration caused by rust stain, mill scale oxides or slight, tight residues of paint or coating that may remain if the surface is pitted, slight residues of rust or paint may by found in the bottom of pits at least two-thirds of each square inch of surface area shall be free of all visible residues and the remainder shall be limited to the light discoloration, slight staining or tight residues mentioned above.

SSPC-SP-6 Steel Structures Painting Council (USA)
SA 2 Swedish Standards Organization
NACE 3 National Organization of Corrosion Engineers (USA)
3rd Quality United Kingdom Standards (BS 4232)

Near-White Blast Cleaning (SA 2-1/2)

Removal of nearly all mill scale, rust, rust scale, paint, or foreign matter by the use of abrasives propelled through nozzles or by centrifugal wheels, to the degree hereafter specified. A near-white blast cleaned surface finish is defined as one from which all oil, grease, dirt, mill scale, rust, corrosion products, oxides, paint or other foreign matter have been completely removed from the surface except for very light shadows, very slight streaks or slight discolorations caused by rust stain, mill scale oxides, or light, tight residues of paint or coating that may remain. At least 95 percent of each square inch of surface area shall be free of all visible residues, and the remainder shall be limited to the light discoloration mentioned above.

SSPC-SP-10 Steel Structures Painting Council (USA)
SA 2-1/2 Swedish Standards Organization
NACE 2 National Organization of Corrosion Engineers (USA)
2nd Quality United Kingdom Standards (BS 4232)

White Metal Blast Cleaning (SA 3)

Removal of all mill scale, rust, rust scale, paint or foreign matter by the use of abrasives propelled through nozzles or by centrifugal wheels. A white metal blast cleaned surface finish is defined as a surface with a gray-white, uniform metallic color, slighty roughened to form a suitable anchor pattern for coatings. The surface, when viewed without magnification, shall be free of all oil, grease, dirt, visible mill scale, rust, corrosion products, oxides, paint, or any other foreign matter.

SSPC-SP-5 Steel Structures Painting Council (USA)
SA 3 Swedish Standards Organization
NACE 1 National Organization of Corrosion Engineers (USA)
1st Quality United Kingdom Strandards (BS 4232)

Steel surface largely covered with adhering mill scale but little, if any, rust.

Steel surface has begun to rust and mill scale has begun to flake.

Mill scale on steel surface has rusted away, but with slight pitting visible under normal vision.

Mill scale on steel surface has rusted away, general pitting is visible under normal vision.

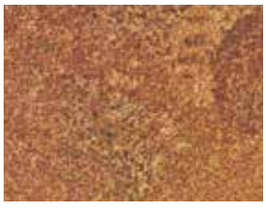

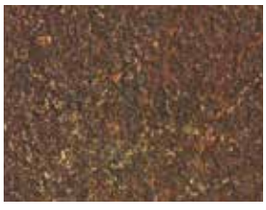

The surface finish achieved by abrasive blast cleaning depends upon the original surface condition as well as the type of blasting equipment used, and the size, hardness, and type of abrasive.

The original surface condition of the steel can be described as:

- Steel surface largely covered with adhering mill scale by little, if any, rust.
- Steel surface which has begun to rust and from which the mill scale has begun to flake.
- Steel surface on which the mill scale has rusted away or from which it can be scraped, but with slight pitting visible under normal vision.
- Steel surface on which the mill scale has rusted away and on which general pitting is visible under normal vision.

Surface cleanliness is divided into four grades:

- SA 1 Brush off.
- SA 2 Commercial.
- SA 2-1/2 Near white metal.
- SA 3 White metal.

Airblast has become the industry standard, manufacturing and supplying surface finishing equipment world-wide through a network of branch-offices as well as distributors.

Nozzle size in mm:	4,8	6,5	8,0	9,5	11.0	12,5
CFM @ 7 bar / 100 PSI	46	83	129	187	254	332
Sand usage / hr.	330	618	1015	1440	1980	2530
FINISH: White Metal NACE #1/ SA3	SQUARE METER PER HOUR					
Loose Mill Scale; Light Rust; No Surface Pitting	3,1	5,8	101	13,4	18,4	23,5
Tight Mill Scale; Overall Rust; Some Pitting	2,5	4,7	7,9	11,1	17,2	19,5
Painted Surface; Heavy Rust; Pitted Surface	1,5	2,9	4,7	6,7	9,2	11,7
Multi-Coated or Heavily Pitted; Rust Scale	1,2	2,3	3,8	5,3	7,3	9,4
FINISH: Near White NACE #2/ SA2½	SQUARE METER PER HOUR					
Loose Mill Scale; Light Rust; No Surface Pitting	3,3	7,9	9,8	14,0	19,3	24,7
Tight Mill Scale; Overall Rust; Some Pitting	2,6	5.0	8,3	11,7	16,1	20,4
Painted Surface; Heavy Rust; Pitted Surface	1,6	3,1	5,0	7,2	9,7	12,3
Multi-Coated or Heavily Pitted; Rust Scale	1,3	2,4	4,0	5,6	7,7	9,8
FINISH: Commercial NACE #3/ SA2	SQUARE METER PER HOUR					
Loose Mill Scale; Light Rust; No Surface Pitting	7,6	14,3	23,4	33,4	46,0	77,3
Tight Mill Scale; Overall Rust; Some Pitting	5,1	9,6	17,6	22,3	30,7	39,1
Painted Surface; Heavy Rust; Pitted Surface	3,8	7,2	11,8	16,7	22,9	29,5
Multi-Coated or Heavily Pitted; Rust Scale	2,5	4,7	7,9	11,1	15,3	19,5
Performance results should be used as a guide only.						

Effect of Nozzle Wear on Air Consumption				
Nozzle Size	Orifice size		Air Flow in cfm	Increase in Air Consumption
	inches	metric		
4	1/4	6.5 mm	81 cfm	
5	5/16	8.0 mm	137 cfm	96% more than No. 4
6	3/8	9.5 mm	196 cfm	43% more than No. 5
7	7/16	11.0 mm	254 cfm	29% more than No. 6
8	1/2	12.5 mm	338 cfm	33% more than No. 7

Information shown is based upon air consumption at 100 psi (7 bar/700kPa)

Checking Compressed Air Quality

Prior to blasting and/or blowing off the work surface

Why compressed air quality is critical
One of the key aims of blast cleaning is to remove surface contaminants, corrosion, old paint etc. to ensure the performance of the coating system.

The compressed air must be clean, otherwise the blasting will introduce fresh contaminants as fast as the old contaminants are removed!

Contaminants to check in the compressed air
- dirt
- oil (mist or droplets)
- moisture (mist or droplets)

Each and all of these can cause coating failure!

Recommended check intervals
- Test before commencing blasting
- Every 4 hours when blasting continuously

Blotter paper method to check air quality
1. Start the compressor and set up the blast equipment
2. Secure the test paper apparatus
3. When the compressor is warmed up, start the blast equipment with NO abrasive in the airstream
4. Position the nozzle so the test paper is in the centre of the airstream and within 24” (600mm) of the nozzle
5. Sustain the test for 2 minutes continuously
6. After 2 minutes, stop the test and immediately check the test paper for any sign, feel or smell of oil, moisture or other contaminants.

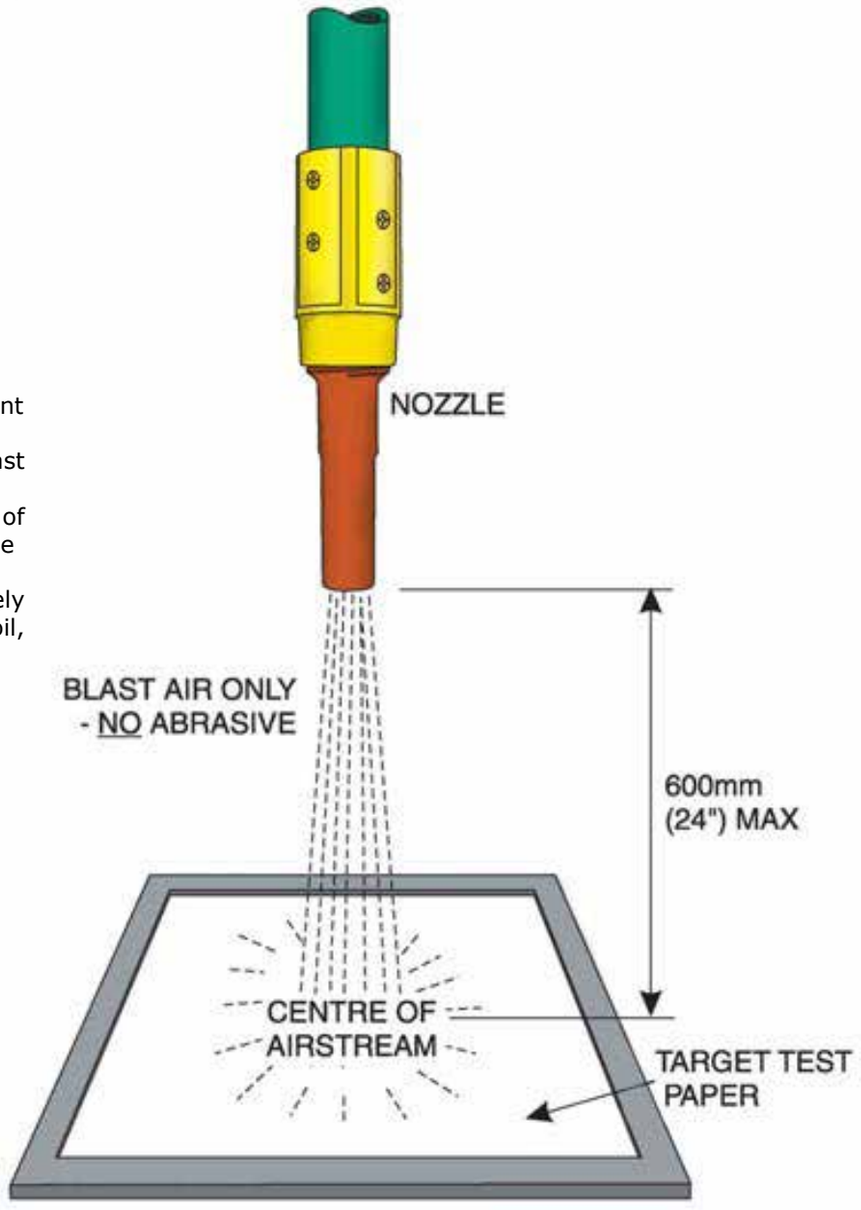

DISCLAIMER: The above information and procedure does not nor shall not be taken as representing not intending to be an approved nor a complying nor a standard method nor procedure for testing compressed air quality. Airblast expressly disclaims any liability for the use or misuse of the above information and procedure.

Formula
Corrected Volume Solids (CVS)

$$CVS = \frac{\text{Original Vol. Solids} \times 100}{(100 + \%\ \text{thinner added})}$$

Corrected volume solids (to the nearest 1%) after adding thinner to various initial volume solids coatings

Initial volume solids before thinning	Amount of Thinner Added per 20 Litres									
%	2.5%	3.125%	5%	6.25%	7.5%	10%	12.5%	18.75%	25%	27.5%
ml	500	625	1000	1250	1500					
litres			1	1.25	1.5	2	2.5	3.75	5	7.5
100%	98	97	96-95	94	93	91	89	84	80	73
95%	93	93	91-90	90	89-88	87	85	81	77	70
90%	88	87	86	84	84	82	80	76	72	66
85%	83	82	81	80	79	78	76	72	68	62
80%	78	78	77-76	75	74	73	71	68	64	58
75%	73	73	72	71	70	69-68	67	63	60	55
70%	68	68	67	66	65	64	62	59	56	51
65%	64	63	62	61	60	60-59	58	55	52	47
60%	59	58	57	57	56-55	55	53	51	48	44
55%	54	53	53-52	52	51	50	49	46	44	40
50%	49	48	48	47	46	46	45	42	40	36
45%	44	44	43	42	42	41	40	38	36	33
40%	39	39	38	38	37	37-36	36	34	32	29
35%	34	34	34	33	33	32	31	30	28	26
30%	29	29	29	28	28	27	27	25	24	22
25%	24	24	24	24	23	23	22	21	20	18

Formula
Applied Wet Film Thickness (WFT)

$$WFT = \frac{\text{Dry Film Thickness (DFT)} \times 100}{\text{Corrected Volume Solids (CVS)}}$$

Application wet film thickness (in microns)* to achieve required DFT for various volume solids coatings

Required DFT (microns)	Volume Solids %												
	35	40	45	50	55	60	65	70	75	80	85	90	95
25	71	63	56	50	46	42	39	36	33	31	29	28	26
50	143	125	111	100	91	83	77	71	67	63	59	56	53
75	214	188	167	150	136	125	115	107	100	94	88	83	79
100	286	250	222	200	182	167	154	143	133	125	118	111	105
125	357	313	278	250	227	208	192	179	167	156	147	139	132
150	429	375	333	300	273	250	231	214	200	188	176	167	158
175	500	438	389	350	318	292	269	250	233	219	206	194	184
200	571	500	444	400	364	333	308	286	267	250	235	222	211
250	714	625	556	500	455	417	385	357	333	313	294	278	263
300	857	750	667	600	546	500	462	429	400	375	353	333	316

* theoretically calculated figures are NOT applicable for zinc coatings

Paint Application Information

Formula

Theoretical Spreading Rate (SR)

$$SR = \frac{\text{Corrected Volume Solids (CVS)} \times 10}{\text{Dry Film Thickness (DFT)}}$$

Spreading rate (in m2/litre)*
achieving required DFT for various solids coatings

Dry Film Thickness (microns)	Volume Solids %																
	20	25	30	35	40	45	50	55	60	65	70	75	80	85	90	95	100
20	10.0	12.5	15.0	17.5	20.0	22.5	25.0	27.5	30.0	32.5	35.0	37.5	40.0	42.5	45.0	47.5	50.0
25	8.0	10.0	12.0	14.0	16.0	18.0	20.0	22.0	24.0	26.0	28.0	30.0	32.0	34.0	36.0	38.0	40.0
30	6.7	8.3	10.0	11.7	13.3	15.0	16.7	18.3	20.0	21.7	23.3	25.0	26.7	28.3	30.0	31.7	33.3
50	4.0	5.0	6.0	7.0	8.0	9.0	10.0	11.0	12.0	13.0	14.0	15.0	16.0	17.0	18.0	19.0	20.0
75	2.7	3.3	4.0	4.7	5.3	6.0	6.7	7.3	8.0	8.7	9.3	10.0	10.7	11.3	12.0	12.7	13.3
100	2.0	2.5	3.0	3.5	4.0	4.5	5.0	5.5	6.0	6.5	7.0	7.5	8.0	8.5	9.0	9.5	10.0
125	1.6	2.0	2.4	2.8	3.2	3.6	4.0	4.4	4.8	5.2	5.6	6.0	6.4	6.8	7.2	7.6	8.0
150	1.3	1.7	2.0	2.3	2.7	3.0	3.3	3.7	4.0	4.3	4.7	5.0	5.3	5.7	6.0	6.3	6.7
175	1.1	1.4	1.7	2.0	2.3	2.6	2.9	3.1	3.4	3.7	4.0	4.3	4.6	4.9	5.1	5.4	5.7
200	1.0	1.3	1.5	1.8	2.0	2.3	2.5	2.8	3.0	3.3	3.5	3.8	4.0	4.3	4.5	4.8	5.0
250	0.8	1.0	1.2	1.4	1.6	1.8	2.0	2.2	2.4	2.6	2.8	3.0	3.2	3.4	3.6	3.8	4.0
300	0.7	0.8	1.0	1.2	1.3	1.5	1.7	1.8	2.0	2.2	2.3	2.5	2.7	2.8	3.0	3.2	3.3
400	0.5	0.6	0.8	0.9	1.0	1.1	1.3	1.4	1.5	1.6	1.8	1.9	2.0	2.1	2.3	2.4	2.5
500	0.4	0.5	0.6	0.7	0.8	0.9	1.0	1.1	1.2	1.3	1.4	1.5	1.6	1.7	1.8	1.9	2.0

* theoretically calculated figures may vary from practical spreading rates by as much as 50% or more.

Surface Profile

Understanding surface profile

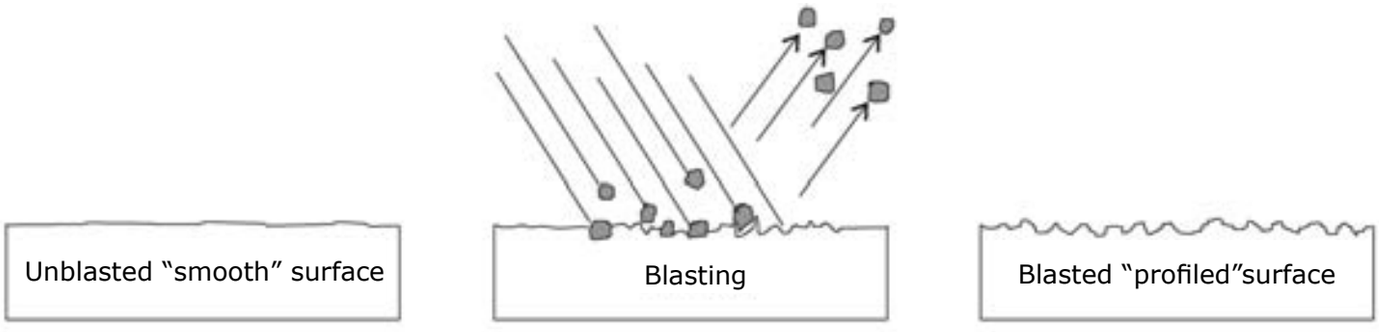

In the blast cleaning process, grains of abrasive are propelled with great force and energy at the work surface. Upon impact, the grains 'dig' into and then rebound out and off the surface leaving a rugged, miniature 'mountain – and – valley' finish.

This surface roughness/etch/texture is the surface profile.

Surface profile is critical to coating performance by
1) increasing the surface area
2) providing a 'key/tooth/anchor pattern' for the coating to lock and adhere to

The difference between surface profile and class of blast
Surface profile is concerned with the 'shape' of the surface finish (and measuring the size of the 'shape' created) whereas Class of Blast is concerned with 'cleanliness' of the surface finish. (Putting it another way – Class of Blast is determining to what degree the rust, paint and other contaminants have been removed). Both the Profile and the Class of Blast are important features of the surface finish and need to be separately specified in preparing a blast cleaned steel surface.

The pitfalls of surface profile
Excess Profile – While an absence of profile can be detrimental to coating adhesion, it can be equally disastrous to have an excessive profile height causing premature rusting and coating failure. In addition more profile means using more paint to cover the surface! Consider these cases…

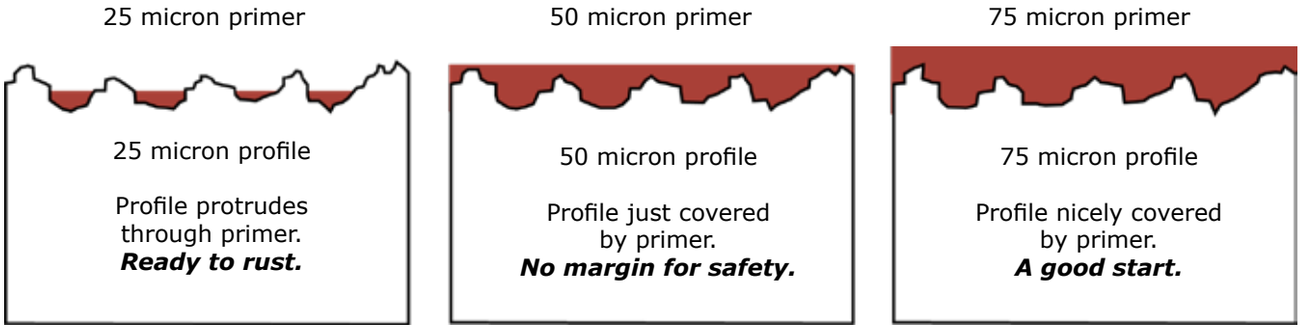

Rule of Thumb #1 : Profile height should not exceed the primer coat DFT.
Rule of Thumb #2 : Profile height should not exceed 1/3 the total coating system DFT.

Embedment – Embedment of abrasive particles in the surface is a threat posed by friable, irregular shape abrasives. The embedded particle or fragment can stand out as a 'rogue' peak above the surrounding profile and protrude through the applied coating.

Surface Profile

Factors which have an effect on surface profile

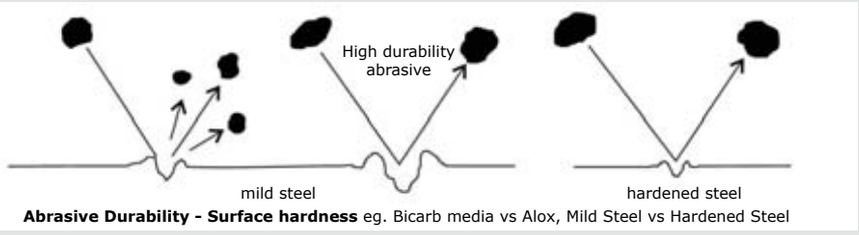

Abrasive Durability - Surface hardness eg. Bicarb media vs Alox, Mild Steel vs Hardened Steel

Variable	Effect
More durable abrasive=	deeper profile
Less durable abrasive=	shallower profiler
Hardened steel =	shallower profile
Mild steel =	deeper profile

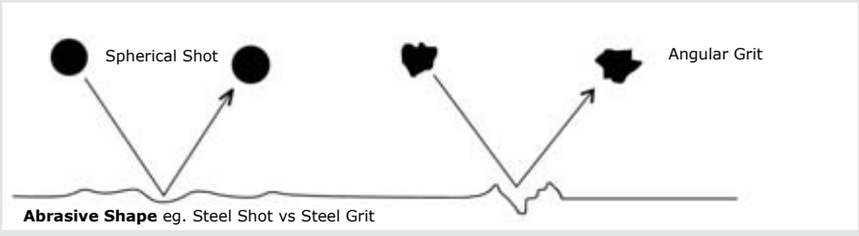

Abrasive Shape eg. Steel Shot vs Steel Grit

Round abrasive =	dimpled, peened profile
Angular abrasive =	sharper, rugged profile

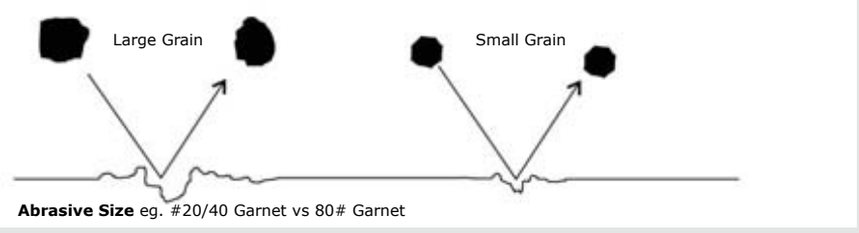

Abrasive Size eg. #20/40 Garnet vs 80# Garnet

Larger abrasive =	deeper profile
Smaller abrasive=	shallower profile

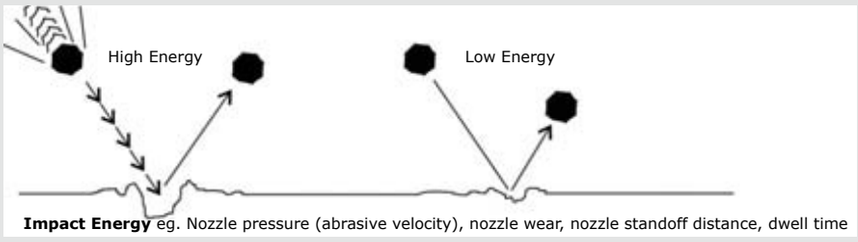

Impact Energy eg. Nozzle pressure (abrasive velocity), nozzle wear, nozzle standoff distance, dwell time

Greater energy =	deeper profile
Lesser energy =	shallower profile

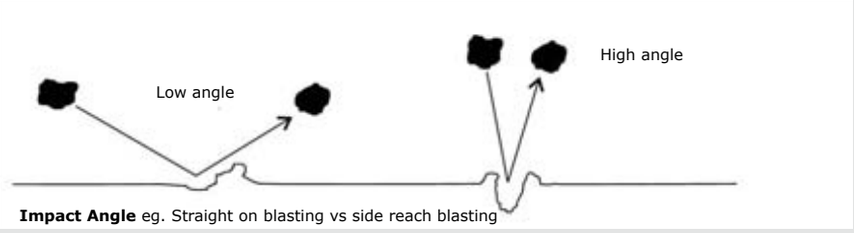

Impact Angle eg. Straight on blasting vs side reach blasting

Low angle =	more scuffed profile
High angle =	more peak 'n' valley even profile

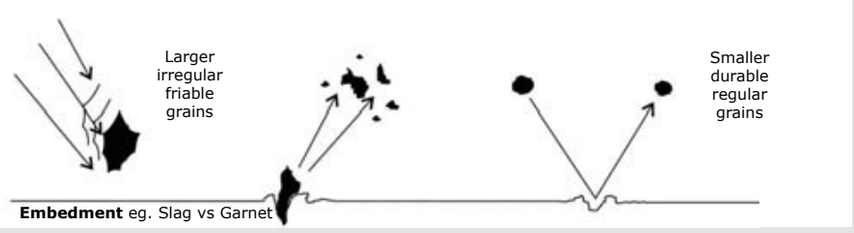

Embedment eg. Slag vs Garnet

Large friable irregular grains =	higher risk of embedment
Smaller durable regular grains =	lower risk of embedment

Surface Cleanliness Factors

Subtle contaminants - causes, tests and prevention
In addition to the obvious gross surface contaminants such as rust and old coatings, there are some subtle but serious contaminants which can cause major coating failure.

Salt (specifically chloride ions)

possible causes
New steel
- contaminated abrasive
- contaminated water (rinsing or pressure washing)

Existing steel
- both of the above, plus environmental industrial exposure, e.g. marine location or industrial process.

tests
many methods are available – including ChlorTest kits, Bresle patches, SCAT kits, conductivity meters – refer work
specification and relevant AS/ISO standards.

prevention
- use a traceable quality, low salt abrasive, e.g. GMA Garnet
- test abrasive for chloride content
- test cleaning water for chloride content
- pretest existing structures for chloride presence prior to blasting
- rinse with clean water and/or a soluble salts remover e.g. Chlor-rid.

Dust/Debris

possible causes
- poor quality abrasive causing excessive dust and debris, e.g. crushed glass
- failure to blowoff surface completely after blasting

tests
- Clean Rag Wipe Test, Pressure Sensitive Tape Method
- refer work specifications and relevant AS/ISO standard.

prevention
- use a low dust abrasive, e.g. GMA Garnet
- blowoff all surfaces after blasting.

Oil/Grease (thin film)

possible causes

New steel	– mill or warehousing or fabrication treatments
	– contaminated compressed air
Existing steel	– the above, plus environmental exposure

tests
Water Break Test, UV Illumination Test – refer work specifications and appropriate AS/ISO standards.

prevention
- test and maintain compressed air quality
- pretest and/or preclean work prior to blasting by degreasing and/or rinsing.

DISCLAIMER: The above information is a guide only. It in no way purports nor represents to cover all factors, causes, tests or prevention of contaminants. Airblast expressly disclaims any liability for the use or misuse of the above information.

Climatic Conditions for Safe Painting

It is critical to the success of most coating systems, that the surface is completely free of moisture prior to and during paint application and curing.

Dewpoint
Condensation of water (dew) from the atmosphere on to the surface will occur, given the right conditions. For a given set of conditions, the temperature at which condensation will occur is called the Dewpoint. As long as the surface temperature is 3°C (or more) above the Dewpoint temperature, it is generally considered safe to paint as far as risk of condensation is concerned.

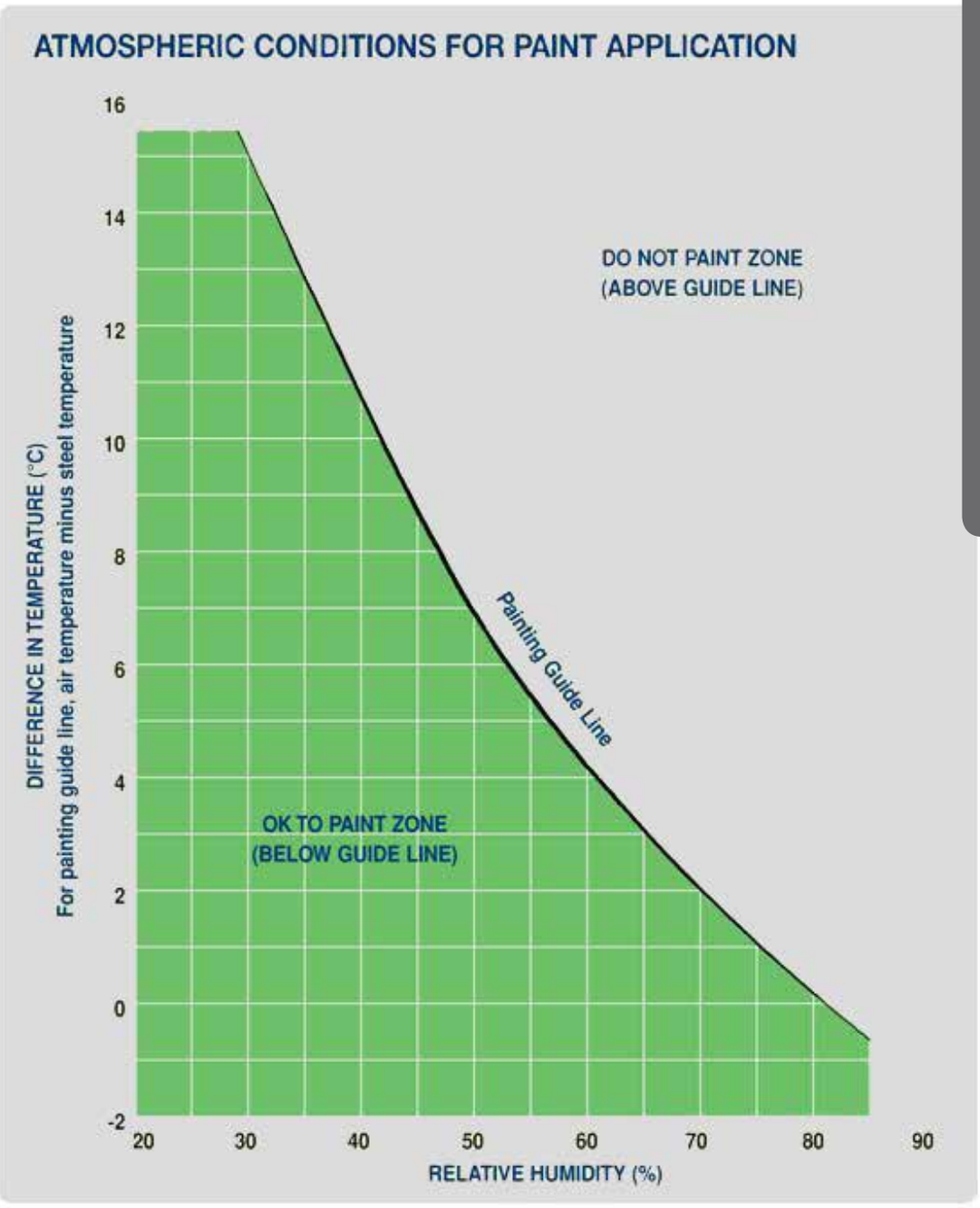

Instructions for use

1. Measure
- air temperature
- surface temperature
- relative humidity

use the same instrument for reading the air and surface temperature, and with an accuracy of ±0.5°C

2. Calculate
the temperature difference ie air temperature minus surface temperature

3. Plot and intersect on the chart
the temperature difference and the relative humidity

If the intersection point is BELOW the guide line
- indicates conditions are safe to paint

ABOVE the guide line
- indicates UNSAFE conditions for painting

DISCLAIMER: The above information and chart do not represent or intend to be the approved nor standard method nor procedure for ensuring suitable climatic conditions for painting. Airblast expressly disclaims any liability for the use or misuse of this information and/or procedures.

Abrasive Characteristic Comparison										
Material	**Mesh Size**	**Shape**	**Density lbs/ft³**	**Mohs**	**Fiability**	**Initial Cos**	**No. of Cycles**	**Per Use Cost**	**Source**	**Typical Applications**
Sil. Sand	6-270	⬢	100	5.0-6.0	high	low	1	med.	nat.	Outdoor blast cleaning
Min. Slag	8-80	⬢	85-112	7.0-7.5	high	med.	1-2	med.	b-p	Outdoor blast cleaning
Steel Grit	10-325	⬢	230	8.0	low	high	200+	med.	mfg.	Removing heavy scale
Steel Shot	8-200	●	280	8.0		high	200+	low	mfg.	Cleaning, peening
Al. Oxide	12-325	⬢	125	8.0-9.0+	med.	high	6-8	med.	mfg.	Cleaning, finishing, deburring, etching
Glass bead	10-400	●	85-90	5.5	med.	med.	8-10	low	mfg.	Cleaning, finishing
Plastic	12-80	⬢	45-60	3.0-4.0	low/med.	high	8-10	med.	mfg.	Paint stripping, deflashing, cleaning
Wheat Starch	12-80	⬢	45	3.0	med.	med.	12-15	high	mfg.	Paint, adhesive removal, composites
XL-Corn Hybrid Polymer	16-60	⬢	45	3.0	low	high	14-17	med.	mfg.	Composite paint removal adhesive deflash
Corn cob	8-40	⬢	35-45	2.0-4.5	med.	low	4-5	low	b-p	Removing paint from delicate surfaces

⬢=Angular ●=Spherical nat. = Natural b-p = By-product mfg. = manufactured

Conversion Factors

AIRBLAST

IMPERIAL TO METRIC		METRIC TO IMPERIAL	
Length		**Length**	
thousandth of inch (thou or mil)	x 25.4 = µm	microns (µm)	x 0.03937 = thou or mil
inches (in)	x 25.4 = mm	millimetres (mm)	x 0.03937 = in
feet (ft)	x 0.3048 = m	metres (m)	x 3.28083 = ft
Area		**Area**	
square inches (in2)	x 645.16 = mm2	square millimetres (mm2)	x 0.00155 = in2
square feet (ft2)	x 0.0929 = m2	square metres (m2)	x 10.7639 = ft2
Volume		**Volume**	
cubic inches (cu in)	x 16.38716 = cm3 or mL	cubic centimetres (cm3)	x 0.061023 = cu in
cubic feet (cu ft)	x 0.028317 = m3	cubic metres (m3)	x 35.3145 = cu ft
cubic feet (cu ft)	x 28.31701 = L	litres (L)	x 0.035315 = cu ft
US gallons (gal)	x 3.7854 = L	litres (L)	x 0.26417 = US gal
quart (qt)	x 0.9464 = L	litres (L)	x 1.05668 = qt
fluid ounces (fl oz)	x 29.57 = mL	millilitres (mL)	x 0.03381 = fl oz
Speed - Velocity		**Speed - Velocity**	
feet per minute (ft/min) feet per	x 0.00508 = m/s	metres per second (m/s)	x 196.85 = ft/min
second (ft/s)	x 0.03048 = m/s	metres per second (m/s)	x 3.28083 = ft/s
Flow Rate		**Flow Rate**	
cubic feet per minute (CFM)	x 0.47195 = L/s	litres per second (L/s)	x 2.11887 = CFM
cubic feet per minute (CFM) cubic	x 0.028317 = m3/min	cubic metres per minute (m3/min)	x 35.3145 = CFM
feet per minute (CFM)	x 1.69902 = m3/hr	cubic metres per hour (m3/hr)	x 0.58857 = CFM
US gallons per minute (gpm)	x 3.7854 = L/min	litres per minute (L/min)	x 0.26417 = US gpm
Weight - Mass		**Weight - Mass**	
pounds (lb)	x 0.4536 = kg	kilograms (kg)	x 2.2046 = lb
Bulk - Density		**Bulk - Density**	
pounds per cubic foot (lb/cuft)	x 16.0185 = kg/m3	kilograms per cubic metre (kg/m3)	x 0.062428 = lb/cuft
pounds per cubic foot (lb/cuft)	x 0.016019 = kg/L	kilograms per litre (kg/L)	x 62.4277 = lb/cuft
Pressure		**Pressure**	
pounds per square inch (psi)	x 6.8947 = kPa	kilopascals (kPa)	x 0.145 = psi
pounds per square inch (psi)	x 0.0068947 = MPa	Megapascals (MPa)	x 145.04 = psi
pounds per square inch (psi)	x 0.068947 = bar	bar (bar)	x 14.504 = psi
Vacuum		**Vacuum**	
inches of mercury (in. Hg)	x 3.38638 = -kPa	kilopascals vacuum (-kPa)	x 0.2953 = in. Hg
inches of mercury (in. Hg)	x 13.596 = in. H2O	inches of water (in. H2O)	x 0.07355 = In. Hg
Power		**Power**	
horsepower (hp)	x 0.7457 = kW	kilowatts (kW)	x 1.341 = hp
Temperature		**Temperature**	
degrees Fahrenheit (°F)	- 32, then x 0.5555 = °C	degrees Celsius (°C)	x 1.8, then +32 = °F

Notes

Airblast Group

THE NETHERLANDS
Airblast B.V. - Corporate Headquarters
P.O. Box 1075
1700 BB Heerhugowaard
Tel. : + 31 72 5718002
Fax : + 31 72 5714340
Email : info@airblast.com
Web : www.airblast.com

Airblast-Abrasives B.V.
Fluorietweg 23 E
1812 RR Alkmaar
Tel. : + 31 72 5715569
Fax : + 31 72 5714340
Email : info@airblast-abrasives.com
Web : www.airblast-abrasives.com

UNITED ARAB EMIRATES
Airblast Middle East LLC
P.O. Box 33419
Dubai
Tel. : + 971 4 3242776
Fax : + 971 4 3242778
Email : airblast@emirates.net.ae

SAUDI ARABIA
Airblast Saudi Trading & Industrial Est.
P.O. Box 30476
Al-Khobar 31952
Tel. : + 966 13847 3178
Fax : + 966 13847 1430
Email : info@airblast.com.sa

QATAR
Airblast Qatar WLL
P.O. Box 47044
Wakra
Tel : + 974 4 463 1043 / 1074
Fax : + 974 4 463 1154
Email : info@airblast.com.qa

SINGAPORE
Asia Airblast Pte Ltd.
No. 55 Tuas Avenue 1
Singapore 639503
Tel. : + 65 6266 6010
Fax : + 65 6266 6968
Email : airblastsg@singnet.com.sg
Web : www.airblastasia.com

MALAYSIA
Airblast Equipment Malaysia Sdn Bhd.
No. 60, Jalan Permas 9/7,
Bandar Baru Permas Jaya
81750 Masai, Johor Darul Takzim
Tel : + 60 7387 4989
Fax : + 60 7387 5989
Email : abcorrosion@airblastasia.com

INDONESIA
PT Airblast Equipment Indonesia
Pergudangan Sentra Industri Terpadu III
Blok A no. 2, Penjaringan
PIK, Jakarta Utara. Jakarta 14470
Tel. : +62-21-29032818 / 9
Email : aei.enquiry@airblastasia.com

INDIA
Airblast Equipment India Pvt Ltd
#5-9-30/5 Unit 203
Paigah Plaza, Basheer Bagh
Hyderabad - 500063
Telangana State
Tel. : + 91 40 6674 8855
Fax : + 91 40 6674 8851
Email : info@airblastindia.com
Web : www.airblastindia.com

CHINA
Airblast Surface Treatment Co. Ltd.
Suit 14B - No.58 Xin Jin Qiao Rd.
Pudong New Area
Shanghai
Tel. : + 86-21-61060216
Fax : + 86-21-61062017
Email : airblast@outlook.com.cn

AUSTRALIA
Airblast Australia (Perth)
Unit 5, 16-18 Kewdale Rd
Kewdale WA 6105
Tel : +61 (08) 9451 4600
Fax : +61 (08) 9451 4966
Email : sales@airblastwa.com.au
Web : www.airblastaustralia.com

Airblast Australia (Victoria)
13B The Crossway
Campbellfield VIC 3061
Tel : +61 (03) 9357 6522
Fax : +61 (03) 9357 7511
Email : peter@airblastvic.com.au
Web : www.airblastaustralia.com

Airblast Australia (Queensland)
Unit 1 / 272 Lavarack Ave
Pinkenba QLD 4008
Tel : +61 (07) 3260 2670
Fax : +61 (07) 3260 2672
Email : ross@airblastqld.com.au
Web : www.airblastaustralia.com

POLAND
Airblast Poland sp.zo.o.
Gdyńska 60
80-297 Miszewo
Tel. : + 48 (58) 680 00 86
Email : biuro@airblast.com.pl
Web : www.airblast.com.pl

Or contact your local distributor.

© 2015 Airblast B.V. - Doc. nr. LT9050E - Rev. F Nov 2018